减速机 专业制造商

REDUCER PROFESSIONAL MANUFACTURER

AERFA

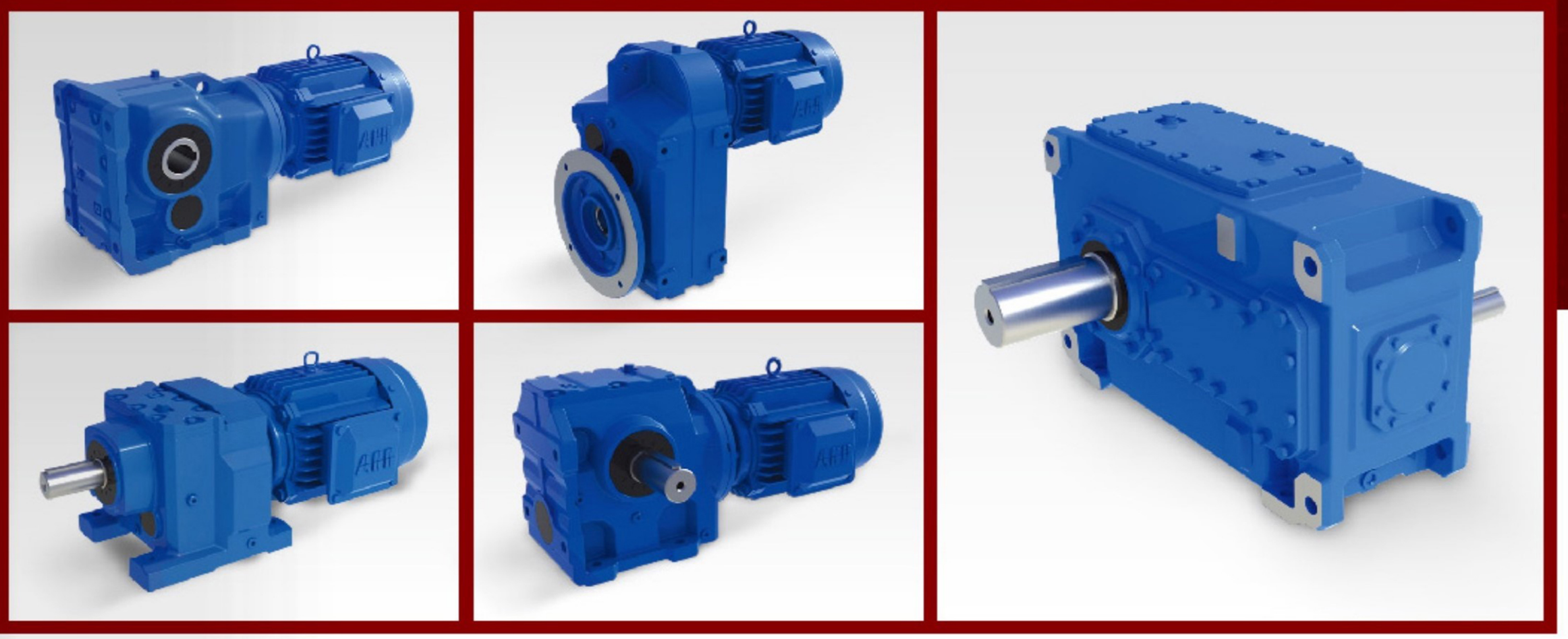

P系列减速机选型手册

REDUCER SELECTION MANUAL

温州阿尔法机械制造有限公司

WENZHOU AERFA MACHINERY MANUFACTURING CO., LTD.

P系列工业齿轮箱概述：

- ❑ 采用模块化设计，可根据客户要求进行变化组合。
- ❑ 箱体采用球墨铸铁，大大提高了箱体的刚性及抗震性。
- ❑ 箱体内的太阳轮、行星轮、内齿圈及螺旋锥齿轮均采用可控气氛渗碳淬火处理，得到高硬耐磨表面，热处理后全部磨齿，降低了噪音，提高了整机的效率及使用寿命。
- ❑ 输入方式：同心轴输入，斜齿轮输入，锥齿轮－斜齿轮输入，锥齿轮输入。
- ❑ 输出方式：内花键式，空心轴收缩盘式，外花键式，实心轴平键。
- ❑ 安装形式：水平安装，垂直安装，扭力臂安装。
- ❑ P系列产品有9-34型规格，行星传动级数有2级和3级。速比为25-4000，和R、K系列组合可得到更大速比。

P series gear units overview:

- ❑ Modular design realizes variable combination.
- ❑ Housing is made of cast iron, which improve its rigidity and anti-vibration.
- ❑ Sun and planet gears are processed by cementite and hardening, gears are processed by grinding, which improve the efficiency and lifetime of gear units.
- ❑ Input mode: coaxial input, helical gear input, bevel-helical gear input.
- ❑ Out put mode: internal involute spline, hollow shaft with shrink disk, external involute spline, solid shaft with flat key.
- ❑ Mounting mode: horizontal vertical, torque-arm.
- ❑ P series sizes 9-34, transmission stage: 2, 3, ratio: 25-4000, ratio will be larger in combination with R, K series.

P

P系列型号规格表示方法举例：

基本型号规格表示方法举例:

Basic type illustration:

P　3　N　A　18－140－B5－99

P系列行星齿轮减速机 Planetary gear units	行星齿轮传动级数(2或3级) Planetary gear units stage (2 or 3)	N、S、L、K N标准型（同心输入）Standard(coaxial) S斜齿轮级Helical gear stage L锥齿轮级Bevel gear stage K锥齿-斜齿轮级Bevel-helical gear stage	A、B、C、D A 带收缩盘空心输出轴Hollow shaft with shrink disk B 带平键的实心输出轴Solid shaft with parallel key C 带渐开线花键空心轴Hollow shaft with involute splines D 带渐开线花键实心轴Solid shaft with involute splines	机座号 Gear unit size	公称减速比 Ratio	安装方位 Mounting position	附件代号 Symbols of add-on pieces



电机直联表示方法举例：

Compact motor mode illustration:

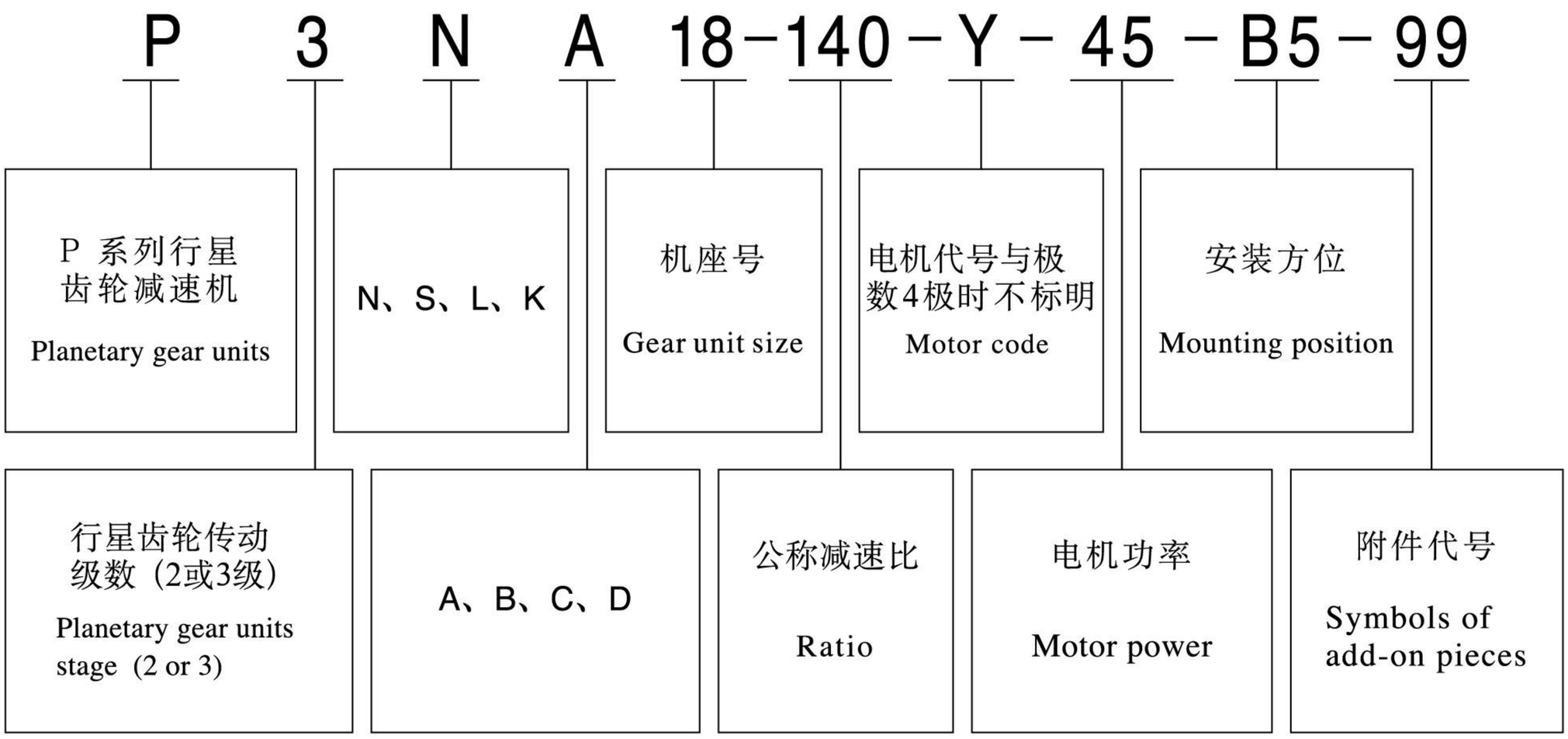

P

输入法兰联接表示方法举例：

Motor-flange mode illustration:

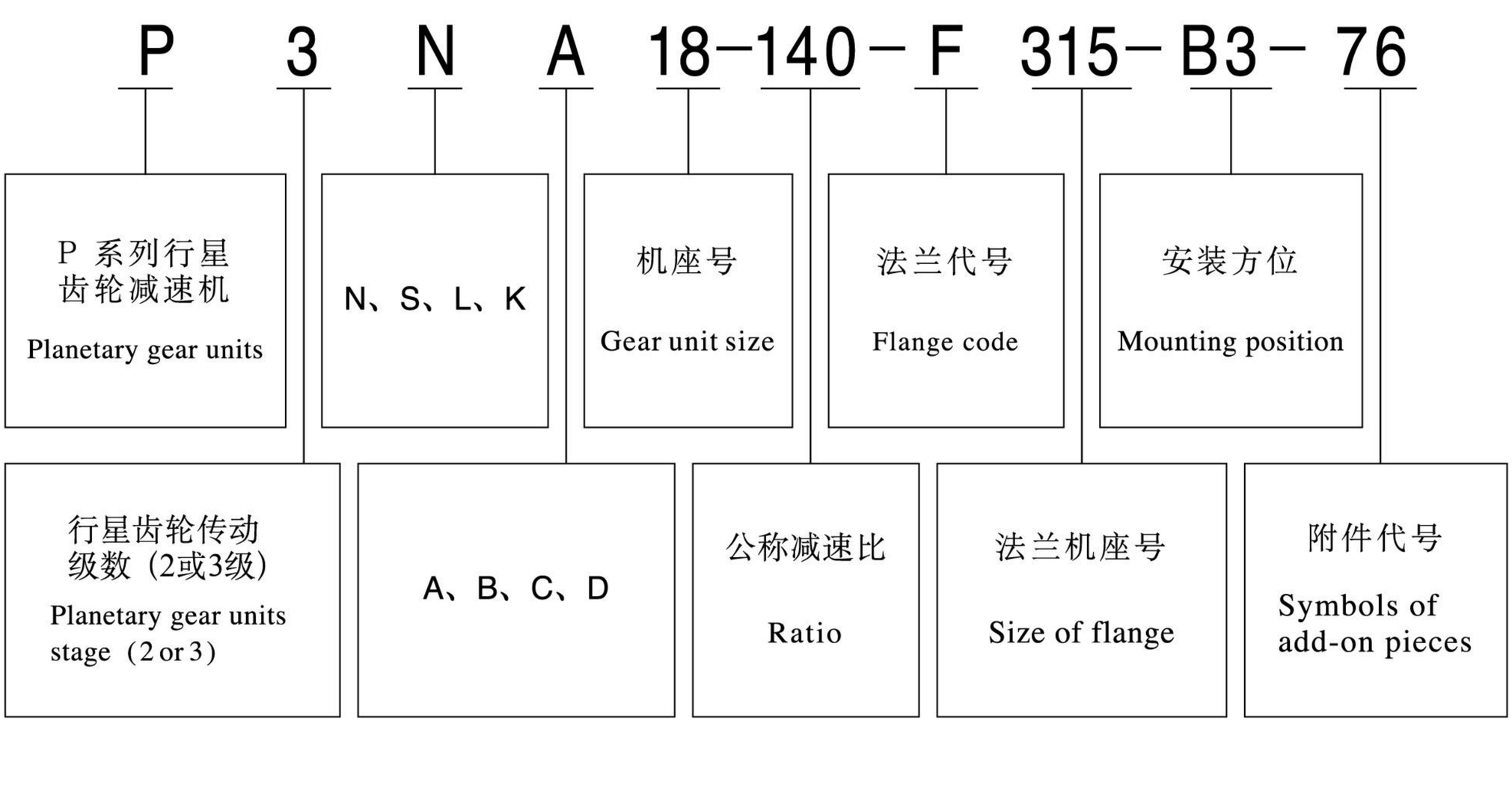

P系列选型及举例：

P series type selection example:

序号 Steps	说　明 Specification	代号 Symbol	参　数　计　算 Calculate parameter
1	被驱动设备系数 Driven machine factor	f1	查255页f1表 See P255 f1 table
2	原动机系数 Factor for prime mover	f2	原动机系数 Factor for prime mover — f2 电机、液压马达、汽轮机 Electric motors, hydraulic motors, turbines — 1.0 4−6缸活塞发动机，周期变化1：100至1：200 Piston engines 4 - 6 cylinders cyclic variation 1 : 100 to 1 : 200 — 1.25 1−3缸活塞发动机，周期变化1：100 Piston engines 1 - 3 cylinders cyclic variation up to 1 : 100 — 1.5
3	齿轮箱许用输入转速 Permissible input speed	n1	≤1500
4	确定减速比 Determine ratio	i	i=n1/n2
5	确定齿轮箱类型 选择传动效率 Efficiency	η	Type / η / Type / η P2N 94% P3N 92% P2L 93% P3S 91% P2S 93% P3K 89% P2K 91%
6	以被驱动设备所需的扭矩或功率,确定齿轮箱的输入功率 Determine input power	P1	P1=T2 · n1/(9550 · i · η) 或 or P1=P2/η
7	根据计算，查传动能力表,确定齿轮箱规格 By calculation, defermine type in reference to transmission table	T2N P1N	T2N ≥T2 · f1 · f2 或 or P1N≥P1 · f1 · f2 如果不满足条件： 3.33 · P1≥P1N ，请向我们咨询。 If not meet: 3.33 · P1≥P1N please consult us.
8	峰值扭矩校核 * Check for maximum torque	TA	PIN≥TA · n1 · f3/9550

f3	每小时峰值负荷次数 Load peaks per hour			
	1−5	6−30	31−100	>100
单向载荷 Steady direction of load	0.5	0.65	0.7	0.85
交变载荷 Altemating direction of load	0.7	0.95	1.10	1.25

9	输出轴的径向力、轴向力校核 Verify axial and radial forces	Fr、Fa	查254页P系列Fr表 See page 254, P series Fr table
10	计算功率利用率确定其系数 Determine power utilization factor	f14	功率利用率 Utilization = P1/P1N · 100% 确定其系数f14. Determine f14.

功率利用率 Utilization	30%	40%	50%	60%	70%	80%	90%	100%
f14	0.66	0.77	0.83	0.90	0.90	0.95	1.0	1.0

11	热容量校核 Verify thermal capacity	PG	P1≤PG= PG1 · f4 · f14 若不能满足上式,则齿轮箱需外加辅助冷却装置(根据工况要求,可采用冷却水,冷却油,风冷等形式) If P1＞PG , auxilliary cooling system shoulld be installed.

环境温度系数 Ambient temperature factor f4

环境温度 Ambient Temperature	每小时工作周期（ED）百分比% Operating cycle per hour (ED) in %				
	100	80	60	40	20
10 ° C	1.14	1.20	1.32	1.54	2.04
20 ° C	1.00	1.06	1.16	1.35	1.79
30 ° C	0.87	0.93	1.00	1.18	1.56
40 ° C	0.71	0.75	0.82	0.96	1.27
50 ° C	0.55	0.58	0.64	0.74	0.98

12	确定润滑方式 Verify lubrication method		V1 、V3、 V11 、V31安装方位为浸油润滑;B51强制润滑；其它安装方位为飞溅润滑或油泵。 V1 、V3、 V11 、V31: Dip lubrication; B51:Pump lubrication; others: splash lubrication.
13	椐据输入,输出方式,安装方位等确定具体型号及所需附件 Determine type according to the above.		

* **峰值扭矩：最大负载扭矩，是指启动、制动或最大脉动载荷所引起的最大扭矩。（一般工况条件下峰值扭矩为启动或制动时的最大扭矩）**
Peak torque: Maximum torque is maximum starting torque, maximum braking torque.

选 型 举 例
Selection example

输送设备,输入转速为1000r/min,
最大起动扭矩为2000N · m,输出转速为12.5r/min,
输出扭矩为68000N · m,每天工作12h。
负载持续率为60%，环境温度为0～20℃，大车间安装，风速约为5m/s,海拔高度为1000m以下，水平式法兰安装,偏心平行轴输入,输出,双轴型,实心轴普通平键输出。

解答:

f1=1.5

f2=1

n1=1000

i=1000/12.5=80

根据速比及输入输出轴要求可选P2S型

η=0.93

P1=T2 · n1/(9550 · i · η)

=68000 × 1000/(9550 × 80 × 0.93)=95.7kW

T2N≥T2 × f1 × f2=68000N · m × 1.5 × 1=102kN · m

P1N≥P1 × f1 × f2=95.7 × 1.5 × 1=143.55kW

初选P2SB14-80-B5-99

其P1N=153kW　PG1=94kW　iex=78.827

校核：3.33 × P1≥P1 N

3.33 × 95.7 = 318.681 kW > P1N　满足要求。

峰值扭矩校核:

P1N=153kW≥T_A · n1 · f3/9550

=2000 × 1000 × 0.5/9550=104.71kW　满足要求。

热容量校核:

公称功率利用率=P1/P1N=95.7/153=0.625=62.5%

查P系列选型表得 f14=0.9　f4=1.16

PG1 × f4 × f14=94 × 1.16 × 0.9=100.32kW > P1

因此无须外加辅助冷却装置就可满足设备要求。

根据设备要求,安装方位为B5

润滑方式:飞溅润滑

选定型号为：**P2SB14-80-B5-99**

Conveyer, input speed 1000r/min,
Max starting torque 2000N · m, output speed 12.5r/min,
Output torque 68000N · m, service time 12h/day.
Dnration of load 60% of workin circle, ambient temperature 0～20℃, wind velocity 5m/s, large workshops, altitude below 1000m,
horizontal flange-mounted with solid output shaft.

f_1=1.5

f_2=1

n1=1000

i=1000/12.5=80

Choose P2S according to the above data.

η=0.93

P1=T2 · n1/(9550 · i · η)

=68000 × 1000/(9550 × 80 × 0.93)=95.7kW

T2N≥T2 × f1 × f2=68000N · m × 1.5 × 1=102kN · m

P1N≥P1 × f1 × f2=95.7 × 1.5 × 1=143.55kW

Refer to transmission capacity table,
choose P2SB14-80-B5-99,

P1N=153kW　PG1=94kW　iex=78.827

Check: 3.33 × P1≥P1N

3.33 × 95.7 = 318.681 kW > P_{1N}

Check verify peak torque:

P1N=153kW≥T_A · n1 · f3/9550

=2000 × 1000 × 0.5/9550=104.71kW

Check thermal capacities:

Utilization =P1/1PN=95.7/153=0.625=62.5%

So f14=1　Get f4=1.16, according to working conditions.

PG1 × f4 × f14=94 × 1.16 × 0.9=100.32kW > P1

No attached cooling devices can meet requirement.

Mounting position B5

Lubrication method: splash

TYPE: **P2SB14-80-B5-99**

P

符号说明：

ED= 每小时工作周期，以百分比表示，如ED=60%/h

f1=被驱动设备系数

f2=原动机系数

f3=峰值扭矩系数

f4=环境温度系数

f14=设备功率利用率

PG1=不带辅助冷却装置的齿轮箱热容量

Fr2=允许径向力

P1N=减速机额定许用输入功率

TA=峰值扭矩，或者启动、制动时最大扭矩

Symbol description:

ED =operating cycle per hour, express as percent, for example ED=60%/h

f1=Factor for driven machine

f2=Factor for prime mover

f3=Peak torquq factor

f4 =Ambient temperature factor

f14 = Utilization factor

PG1=Thermal capacity for gear units without auxiliary cooling,

Fr2= Permissible radial forces

P_{N1}= Required power rating

T_A =Tax. torque occurring on input shaft,e.g. peak operating, starting- or braking torque

P

P系列Fr2(N)表：

P series Fr(N) table:

n_1 (r/min)	n_{2N}	i_N	Fr 2 (N)													
			9	10	11	12	13	14	16	17	18	19-20	21-22	23-24	25-26	27-28
1450	58.0	25	9538	23353	32518	42407	34737	41183	72297	64454	69713	70477	99136	99347	123583	126071
	51.8	28	9905	24252	33770	44039	36057	42768	75080	66935	72396	73190	102952	103171	128341	130925
	46.0	31.5	10302	25223	35122	45803	37519	44481	78086	69616	75295	76121	107075	107302	133480	136167
	40.8	35.5	10720	26249	36550	47665	39044	46289	81261	72446	78356	79215	111428	111665	138907	141703
	36.3	40	11155	27314	38033	49599	40629	48167	84559	75386	81536	82430	115950	116196	144544	147454
	32.2	45	11602	28408	39556	51585	42256	50096	87945	78404	84801	85731	120593	120849	150332	153358
	29.0	50	12017	29423	40970	53429	43766	51887	91088	81207	87832	88795	124903	125169	155705	158840
	25.9	56	12479	30556	42547	55486	45451	53884	94595	84333	91214	92214	129712	129988	161700	164955
	23.0	63	12979	31779	44251	57708	47271	56042	98383	87710	94866	95906	134906	135193	168175	171560
	20.4	71	13507	33071	46050	60054	49193	58320	102382	91276	98723	99805	140390	140689	175011	178534
	18.1	80	14055	34413	47919	62491	51189	60687	106537	94980	102729	103856	146088	146398	182114	185780
	16.1	90	14618	35791	49838	64993	53239	63117	110803	98783	106843	108014	151937	152260	189406	193219
	14.5	100	15140	37071	51619	67316	55142	65373	114764	102314	110662	111875	157368	157703	196176	200125
	12.9	112	15723	38498	53606	69908	57265	67890	119182	106253	114922	116182	163427	163774	203729	207830
	11.6	125	16309	39933	55605	72514	59400	70421	123626	110215	119207	120514	169520	169880	211325	215578
	10.4	140	16937	41471	57746	75306	61687	73132	128385	114458	123796	125153	176046	176420	219460	223878

备注：各规格更低的输出转速按以上最大的Fr2值。

Note: If there is lower output speed, please choose the maximum Fr2 in above table.



被驱动设备系数 f1　　Service Factors

被驱动设备系数 Factor for driven machine		f1							
工作机 Driven machines		日带载运行时间（小时）Effective daily operating period under load in hours			工作机 Driven machines		日带载运行时间（小时）Effective daily operating period under load in hours		
		0.5	>0.5-10	>10			0.5	>0.5-10	>10
污水处理	Waste water treatment				**输送机械**	Conveyors			
浓缩器（中心传动）	Thickeners (central drive)	–	–	1.2	斗式输送机	Bucket conveyors	–	1.4	1.5
压滤器	Filter presses	1.0	1.3	1.5	绞车	Hauling winches	1.4	1.6	1.6
絮凝器	Flocculation apparata	0.8	1.0	1.3	卷扬机	Hoists	–	1.5	1.8
曝气机	Aerators	–	1.8	2.0	皮带输送机≤150kW	Belt conveyors ≤ 150 kW	1.0	1.2	1.3
搂集设备	Raking equipment	1.0	1.2	1.3	皮带输送机≥150kW	Belt conveyors ≥ 150 kW	1.1	1.3	1.4
纵向、回转组合式接集装置	Combined longitudinal and rotary rakes	1.0	1.3	1.5	货用电梯 *	Goods lifts	–	1.2	1.5
浓缩器	Pre-thickeners	–	1.1	1.3	客用电梯 *	Passenger lifts	–	1.5	1.8
螺杆泵	Screw pumps	–	1.3	1.5	刮板式输送机	Apron conveyors	–	1.2	1.5
水轮机	Water turbines	–	–	2.0	自动扶梯	Escalators	1.0	1.2	1.4
泵	Pumps				轨道行走机构	Rail travelling gears	–	1.5	–
离心泵	Centrifugal pumps	1.0	1.2	1.3					
容积式泵	Positive-displacement pumps				**变频装置**	Frequency converters	–	1.8	2.0
1个活塞	1 piston	1.3	1.4	1.8					
>1个活塞	> 1piston	1.2	1.4	1.5	**往复式压缩机**	Reciprocating compressors	–	1.8	1.9
挖泥机	Dredgers				**起重机械 ** **	Cranes			
斗式运输机	Bucket conveyors	–	1.6	1.6	回转机构 *	Slewing gears	1.0	1.4	1.8
倾卸装置	Dumping devices	–	1.3	1.5	俯仰机构	Luffing gears	1.0	1.1	1.4
Carterpillar行走机构	Carterpillar travelling gears	1.2	1.6	1.8	行走机构	Travelling gears	1.1	1.6	2.0
斗式挖掘机	Bucket wheel excavators				提升机构	Hoisting gears	1.0	1.1	1.4
用于捡拾	as pick-up	–	1.7	1.7	转臂式起重机	Derricking jib cranes	1.0	1.2	1.6
用于粗料	for primitive material	–	2.2	2.2	**冷却塔**	Cooling towers			
切碎机	Cutter heads	–	2.2	2.2	冷却塔风扇	Cooling tower fans	–	–	2.0
行走机构 *	Traversing gears	–	1.4	1.8	风机（轴流和离心式）	Blowers (axial and radial)	–	1.4	1.5
弯板机	Plate bending machines	–	1.0	1.0	**食品工业**	Food industry			
化学工业	Chemical industry				蔗糖生产	Cane sugar production			
挤压机	Extruders	–	–	1.6	甘蔗切碎机 *	Cane knives	–	–	1.7
调浆机	Dough mills	–	1.8	1.8	甘蔗碾磨机	Cane mills	–	–	1.7
橡胶砑光机	Rubber calenders	–	1.5	1.5	甜菜糖生产	Beet sugar production			
冷却圆筒	Cooling drums	–	1.3	1.4	甜菜绞碎机	Beet cossettes macerators,	–	–	1.2
混料机，用于	Mixers for				榨取机，机械致冷机、蒸煮机	Extraction plants, Mechanical refrigerators, Juice boilers,	–	–	1.4
均匀介质	uniform media	1.0	1.3	1.4	甜菜清洗机	Sugar beet washing machines,			
非均匀介质	non-uniform media	1.4	1.6	1.7	甜菜切碎机	Sugar beet cutters	–	–	1.5
搅拌机，用于	Agitators for media with				**造纸机械**	Paper machines			
密度均匀介质	uniform density	1.0	1.3	1.5	各种类型 ***	of all-kind	–	1.8	2.0
不均匀介质	non-uniform density	1.2	1.4	1.6	碎浆机驱动装置	Pulper drives	根据客户要求供货 On request		
不均匀气体吸收	non-uniform gas absorption	1.4	1.6	1.8	**离心式压缩机**	Centrifugal compressors	–	1.4	1.5
烘炉	Toasters	1.0	1.3	1.5	**索道缆车**	Cableways			
离心机	Centrifuges	1.0	1.2	1.3	运货索道	Material ropeways	–	1.3	1.4
金属加工设备	Metal working mills				往返系统空中索道	To- and fro system aerial ropeways	–	1.6	1.8
翻板机	Plate tilters	1.0	1.0	1.2	T型杆升降机	T-bar lifts	–	1.3	1.4
推钢机	Ingot pushers	1.0	1.2	1.2	连续索道	Continuous ropeways	–	1.4	1.6
绕线机	Winding machines	–	1.6	1.6					
冷床横移架	Cooling bed transfer frames	–	1.5	1.5	**水泥工业**	Cement industry			
辊式矫直机	Roller straighteners	–	1.6	1.6	混凝土搅拌器	Concrete mixers	–	1.5	1.5
辊道	Roller tables				破碎机 *	Breakers	–	1.2	1.4
连续式	continuous	–	1.5	1.5	回转窑	Rotary kilns	–	–	2.0
间歇式	intermittent	–	2.0	2.0	管式磨机	Tube mills	–	–	2.0
可逆式轧管机	Reversing tube mills	–	1.8	1.8	选粉机	Separators	–	1.6	1.6
剪切机	Shears				辊压机	Roll crushers	–	–	2.0
连续式 *	continuous	–	1.5	1.5					
曲柄式 *	crank type	1.0	1.0	1.0					
连铸机驱动装置	Continuous casting drivers	–	1.4	1.4					
轧机	Rolls								
可逆式开坯机	Reversing blooming mills	–	2.5	2.5					
可逆式板坯轧机	Reversing slabbing mills	–	2.5	2.5					
可逆式线材轧机	Reversing wire mills	–	1.8	1.8					
可逆式薄板轧机	Reversing sheet mills	–	2.0	2.0					
可逆式中厚板轧机	Reversing plate mills	–	1.8	1.8					
辊缝调节驱动装置	Roll adjustment drives	0.9	1.0	–					

1. 工作机额定功率P2的确定：

*）按最大的扭矩确定额定功率。

**）可交载荷准确地分类。

***）检验热容量是绝对必要的。

2. 所列各项系数均为经验值。使用这些系数的前提条件是，所述机械设备应符合通常的设计规范和载荷条件。如遇特殊情况，请及时与我们取得联系。

3. 对于那些未列入此表的工作机械，请与我们联系。

1. Design for power rating of driven machine P2

*) Designed power corresponding to max. torque

**) Load can be exactly classified, for Instance.

***) A check for thermal capacity is absolutely essential.

2. The listed factors are empirical values. Prerequisite for their application is that the machinery and equipment mentioned correspond to generally accepted design and load specifications. In case of deviations from standard conditions, please refer to us.

3. For driven machines which are not listed in this table,please refer to us.

P2N和P2S传动能力表：（i=25~125）

P2N & P2S transmission capacity table: （i=25~125）

n_1 (r/min)	n_{2N} (r/min)	i_N	P2-9			P2-10			P2-11			P2-12			P2-13			P2-14		
			T_{2N} (kN·m)	iex	P_{1N} (kW)	T_{2N} (kN·m)	iex	P_{1N} (kW)	T_{2N} (kN·m)	iex	P_{1N} (kW)	T_{2N} (kN·m)	iex	P_{1N} (kW)	T_{2N} (kN·m)	iex	P_{1N} (kW)	T_{2N} (kN·m)	iex	P_{1N} (kW)
1500	60	25	22	25.634	137	31	25.634	193	42	25.875	261	60	24.983	373	83	24.958	516	117	24.958	728
1000	40				91			129			174			249			344			485
750	30				68			96			131			187			258			364
1500	54	28	22	28.058	123	31	28.058	173	42	28.233	235	60	27.26	336	83	27.318	465	117	27.318	655
1000	36				82			116			157			224			310			437
750	27				62			87			118			168			232			327
1500	48	31.5	22	31.142	109	31	31.142	154	42	31.207	209	60	30.13	298	83	30.321	413	117	30.321	582
1000	32				73			103			139			199			275			388
750	24				55			77			104			149			206			291
1500	42	35.5	22	35.201	96	31	35.201	135	42	35.072	183	60	33.863	261	83	34.272	361	117	34.272	509
1000	28				64			90			122			174			241			340
750	21				48			67			91			131			181			255
1500	38	40	22	40.781	87	31	40.781	122	42	40.302	165	60	38.912	236	83	39.706	327	117	39.706	461
1000	25				57			80			109			155			215			303
750	19				43			61			83			118			163			230
1500	33.3	45	22	45.601	77	31	45.601	108	42	43.209	147	60	41.719	209	83	43.797	290	117	43.797	408
1000	22.2				51			72			98			140			193			272
750	16.7				38			54			73			105			145			204
1500	30.0	50	22	51.544	69	31	51.544	97	42	48.561	132	60	46.887	188	83	49.505	261	117	49.505	368
1000	20.0				46			65			88			126			174			245
750	15.0				35			49			66			94			130			184
1500	26.8	56	22	59.715	62	31	59.715	87	42	55.802	118	60	53.878	168	83	57.353	233	117	57.353	328
1000	17.9				41			58			79			112			155			219
750	13.4				31			43			59			84			116			164
1500	23.8	63	22	61.953	55	31	61.953	77	42	63.399	105	60	61.213	150	83	59.977	207	117	59.977	292
1000	15.9				37			52			70			100			138			194
750	11.9				27			39			52			75			103			146
1500	21.1	71	22	71.775	49	31	71.775	69	42	72.853	93	60	70.34	133	83	69.485	184	117	69.485	259
1000	14.1				32			46			62			88			122			173
750	10.6				24			34			46			66			92			129
1500	18.8	80	22	78.782	43	31	78.782	61	42	81.303	82	60	78.499	118	83	78.827	163	117	78.827	230
1000	12.5				29			41			50			79			109			153
750	9.4				22			30			41			59			81			115
1500	16.7	90	22	91.272	38	31	91.272	54	42	93.426	73	60	90.205	105	83	91.324	145	117	91.324	204
1000	11.1				26			36			49			70			97			136
750	8.3				19			27			37			52			72			102
1500	15.0	100	22	99.735	35	31	99.735	49	42	99.678	66	60	96.241	94	83	95.963	130	117	95.963	184
1000	10.0				23			32			44			63			87			123
750	7.5				17			24			33			47			65			92
1500	13.4	112	22	115.55	31	31	115.55	43	42	114.54	59	60	110.59	84	83	111.18	116	117	111.18	164
1000	8.9				21			29			39			56			78			109
750	6.7				15			22			29			42			58			82
1500	12.0	125	22	124.74	28	31	124.74	39	42	123.14	53	60	118.9	75	83	119.12	104	117	119.12	147
1000	8.0				18			26			35			50			70			98
750	6.0				14			19			26			38			52			74

P2N
P2S



P2-16			P2-17			P2-18			P2-19			P2-20			P2-21			i_N	n_{2N} (r/min)	n_1 (r/min)
T_{2N} (kN·m)	iex	P_{1N} (kW)	T_{2N} (kN·m)	iex	P_{1N} (kW)	T_{2N} (kN·m)	iex	P_{1N} (kW)	T_{2N} (kN·m)	iex	P_{1N} (kW)	T_{2N} (kN·m)	iex	P_{1N} (kW)	T_{2N} (kN·m)	iex	P_{1N} (kW)			
160	24.75	995	202	24.75	1256	244	24.958	1517	295	26.622	1834	354	26.622	2201	392	26.622	▮	25	60	1500
		663			837			1012			1223			1468			1625		40	1000
		497			628			759			917			1101			1219		30	750
160	27.09	895	202	27.09	1131	244	27.318	1366	295	29.139	1651	354	29.139	1981	392	29.139	▮	28	54	1500
		597			754			910			1101			1321			1463		36	1000
		448			565			683			825			991			1097		27	750
160	30.068	796	202	30.068	1005	244	30.321	1214	295	32.342	1468	354	32.342	1761	392	32.342	1950	31.5	48	1500
		531			670			809			978			1174			1300		32	1000
		398			502			607			734			881			975		24	750
160	33.987	696	202	33.987	879	244	34.272	1062	295	36.557	1284	354	36.557	1541	392	36.557	1706	35.5	42	1500
		464			586			708			856			1027			1138		28	1000
		348			440			531			642			770			853		21	750
160	39.375	630	202	39.375	796	244	39.706	961	295	42.353	1162	354	42.353	1394	392	42.353	1544	40	38	1500
		415			523			632			764			917			1016		25	1000
		315			398			480			581			697			772		19	750
160	42.318	558	202	42.318	705	244	42.867	852	295	45.725	1030	354	45.725	1236	392	46.357	1368	45	33.3	1500
		372			470			568			686			824			912		22.2	1000
		279			353			426			515			618			684		16.7	750
160	47.833	503	202	47.833	635	244	48.454	766	295	51.684	927	354	51.684	1112	392	52.399	1231	50	30.0	1500
		335			423			511			618			741			821		20.0	1000
		251			317			383			463			556			616		15.0	750
160	55.417	449	202	55.417	567	244	56.136	684	295	59.878	827	354	59.878	993	392	60.706	1099	56	26.8	1500
		299			378			456			552			662			733		17.9	1000
		224			283			342			414			496			550		13.4	750
160	61.438	399	202	61.438	504	244	60.32	608	295	64.341	735	354	64.341	883	392	66.084	977	63	23.8	1500
		266			336			406			490			588			651		15.9	1000
		199			252			304			368			441			489		11.9	750
160	71.178	354	202	71.178	447	244	69.882	540	295	74.541	653	354	74.541	783	392	76.561	867	71	21.1	1500
		236			298			360			435			522			578		14.1	1000
		177			223			270			326			392			434		10.6	750
160	78.788	314	202	78.788	397	244	78.976	479	295	84.841	579	354	84.841	695	392	84.746	770	80	18.8	1500
		209			264			319			386			463			513		12.5	1000
		157			198			240			290			347			385		9.4	750
160	91.278	279	202	91.278	353	244	91.496	426	295	97.596	515	354	97.596	618	392	98.182	684	90	16.7	1500
		186			235			284			343			412			456		11.1	1000
		140			176			213			257			309			342		8.3	750
160	96.594	251	202	96.594	317	244	95.963	383	295	102.36	463	354	102.36	556	392	103.9	616	100	15.0	1500
		168			212			255			309			371			410		10.0	1000
		126			159			192			232			278			308		7.5	750
160	111.91	224	202	111.91	283	244	111.18	342	295	118.59	414	354	118.59	496	392	120.37	550	112	13.4	1500
		150			189			228			276			331			366		8.9	1000
		112			142			171			207			248			275		6.7	750
160	120.59	201	202	120.59	254	244	119.12	307	295	127.06	371	354	127.06	445	392	129.41	493	125	12.0	1500
		134			169			204			247			297			328		8.0	1000
		101			127			153			185			222			246		6.0	750

P2N
P2S

P2N和P2S传动能力表：（i=25～125）

P2N & P2S transmission capacity table : (i=25～125)

n_1 (r/min)	n_{2N} (r/min)	i_N	P2-22			P2-23			P2-24			P2-25			P2-26			P2-27		
			T_{2N} (kN·m)	iex	P_{1N} (kW)	T_{2N} (kN·m)	iex	P_{1N} (kW)	T_{2N} (kN·m)	iex	P_{1N} (kW)	T_{2N} (kN·m)	iex	P_{1N} (kW)	T_{2N} (kN·m)	iex	P_{1N} (kW)	T_{2N} (kN·m)	iex	P_{1N} (kW)
1500	60				▮			▮			▮			▮			▮			▮
1000	40	25	450	26.622	1866	531	26.872	2172	592	26.872	2454	684	26.872	2863	763	26.872	3163	852	26.622	3532
750	30				1399			1595			1841			2127			2372			2649
1500	54				▮			▮			▮			▮			▮			▮
1000	36	28	450	29.139	1679	531	29.321	1914	592	29.321	2209	684	29.321	2552	763	29.321	2847	852	29.139	3179
750	27				1259			1436			1657			1914			2135			2384
1500	48				2239			2552			2945			3403			3796			4238
1000	32	31.5	450	32.342	1492	531	32.409	1701	592	32.409	1963	684	32.409	2268	763	32.409	2350	852	32.342	2826
750	24				1119			1276			1472			1701			1898			2129
1500	42				1959			2233			2577			2977			3321			3709
1000	28	35.5	450	36.557	1306	531	36.424	1489	592	36.424	1718	684	36.424	1985	763	36.424	2214	852	36.557	2472
750	21				979			1117			1288			1489			1661			1854
1500	38				1772			2020			2331			2694			3005			3355
1000	25	40	450	42.353	1166	531	41.855	1329	592	41.855	1534	684	41.855	1772	763	41.855	1977	852	42.353	2208
750	19				886			1010			1166			1347			1502			1678
1500	33.3				1571			1790			2066			2387			2663			▮
1000	22.2	45	450	46.357	1047	531	45.373	1194	592	45.373	1377	684	45.373	1592	763	45.373	1775	852	46.948	1982
750	16.7				785			895			1033			1194			1332			1487
1500	30.0				1414			1611			1860			2149			2397			▮
1000	20.0	50	450	52.399	942	531	50.993	1074	592	50.993	1240	684	50.993	1432	763	50.993	1598	852	53.067	1784
750	15.0				707			806			930			1074			1198			1338
1500	26.8				1262			1439			1660			1918			2140			▮
1000	17.9	56	450	60.706	841	531	58.597	959	592	58.597	1107	684	58.597	1279	763	58.597	1427	852	61.48	1593
750	13.4				631			719			830			959			1070			1195
1500	23.8				1122			1279			1476			1705			1902			▮
1000	15.9	63	450	66.084	748	531	64.442	853	592	64.442	984	684	64.442	1137	763	64.442	1268	852	66.345	1416
750	11.9				561			639			738			853			951			1062
1500	21.1				995			1135			1310			1513			1688			▮
1000	14.1	71	450	76.561	664	531	74.051	757	592	74.051	873	684	74.051	1009	763	74.051	1125	852	76.863	1256
750	10.6				498			567			655			757			844			942
1500	18.8				883			1007			1162			1343			1498			▮
1000	12.5	80	450	84.746	589	531	82.781	671	592	82.781	775	684	82.781	895	763	82.781	999	852	84.241	1115
750	9.4				442			504			581			671			749			836
1500	16.7				785			895			1033			1194			1332			▮
1000	11.1	90	450	98.182	524	531	95.124	597	592	95.124	689	684	95.124	796	763	95.124	888	852	97.596	991
750	8.3				393			448			517			597			666			743
1500	15.0				707			806			930			1074			1198			▮
1000	10.0	100	450	103.9	471	531	101.6	537	592	101.6	620	684	101.6	716	763	101.6	799	852	102.36	892
750	7.5				353			403			465			537			599			669
1500	13.4				631			719			830			959			1070			▮
1000	8.9	112	450	120.37	421	531	116.75	480	592	116.75	553	684	116.75	639	763	116.75	713	852	118.59	797
750	6.7				316			360			415			480			535			597
1500	12.0				565			645			744			859			959			▮
1000	8.0	125	450	129.41	377	531	125.56	430	592	125.56	496	684	125.56	573	763	125.56	639	852	127.06	714
750	6.0				283			322			372			430			479			535

P2N
P2S



P2-28			P2-29			P2-30			P2-31			P2-32			P2-33			P2-34			i_N	n_{2N} (r/min)	n_1 (r/min)
T_{2N} (kN·m)	iex	P_{1N} (kW)	T_{2N} (kN·m)	iex	P_{1N} (kW)	T_{2N} (kN·m)	iex	P_{1N} (kW)	T_{2N} (kN·m)	iex	P_{1N} (kW)	T_{2N} (kN·m)	iex	P_{1N} (kW)	T_{2N} (kN·m)	iex	P_{1N} (kW)	T_{2N} (kN·m)	iex	P_{1N} (kW)			
		▮			▮			▮			▮			▮			▮			▮		60	1500
950	26.622	3938	1060	26.622	4394	1200	26.622	4975	1330	26.872	5514	1500	26.872	6218	1680	26.622	6965	1920	26.622	7960	25	40	1000
		2954			3296			3731			4135			4664			5223			5970		30	750
		▮			▮			▮			▮			▮			▮			▮		54	1500
950	29.139	3544	1060	29.139	3955	1200	29.139	4477	1330	29.321	4962	1500	29.321	5597	1680	29.139	6268	1920	29.139	7164	28	36	1000
		2658			2966			3358			3722			4197			4701			5373		27	750
		4726			5273			5970			6616			7462			8358			9551		48	1500
950	32.342	3151	1060	32.342	3515	1200	32.342	3980	1330	32.409	4411	1500	32.409	4975	1680	32.342	5572	1920	32.342	6368	31.5	32	1000
		2363			2637			2985			3308			3731			4179			4776		24	750
		4135			4614			5223			5789			6529			7313			8358		42	1500
950	36.557	2757	1060	36.557	3076	1200	36.557	3482	1330	36.424	3860	1500	36.424	4353	1680	36.557	4875	1920	36.557	5572	35.5	28	1000
		2068			2307			2612			2895			3265			3656			4179		21	750
		3741			4175			4726			5238			5907			6616			7562		38	1500
950	42.353	2461	1060	42.353	2746	1200	42.353	3109	1330	41.855	3446	1500	41.855	3886	1680	42.353	4353	1920	42.353	4975	40	25	1000
		1871			2087			2363			2619			2954			3308			3781		19	750
		▮			▮			▮			▮			▮			▮			▮		33.3	1500
950	46.948	2210	1060	46.948	2466	1200	46.948	2792	1330	45.575	3095	1500	45.575	3490	1680	45.481	3909	1920	45.481	4467	45	22.2	1000
		1658			1850			2094			2321			2618			2932			3351		16.7	750
		▮			▮			▮			▮			▮			▮			▮		30.0	1500
950	53.067	1989	1060	53.067	2220	1200	53.067	2513	1330	51.221	2785	1500	51.221	3141	1680	51.409	3518	1920	51.409	4021	50	20.0	1000
		1492			1665			1885			2089			2356			2639			3016		15.0	750
		▮			▮			▮			▮			▮			▮			▮		26.8	1500
950	61.48	1776	1060	61.48	1982	1200	61.48	2244	1330	58.858	2487	1500	58.858	2805	1680	59.559	3141	1920	59.559	3590	56	17.9	1000
		1332			1486			1683			1865			2103			2356			2692		13.4	750
		▮			▮			▮			▮			▮			▮			▮		23.8	1500
950	66.345	1579	1060	66.345	1762	1200	66.345	1994	1330	66.102	2210	1500	66.102	2493	1680	66.345	2792	1920	66.345	3191	63	15.9	1000
		1184			1321			1496			1658			1870			2094			2393		11.9	750
		▮			▮			▮			▮			▮			▮			▮		21.1	1500
950	76.863	1401	1060	76.863	1563	1200	76.863	1770	1330	75.958	1961	1500	75.958	2212	1680	76.863	2478	1920	76.863	2831	71	14.1	1000
		1051			1172			1327			1471			1659			1858			2124		10.6	750
		▮			▮			▮			▮			▮			▮			▮		18.8	1500
950	84.241	1243	1060	84.241	1387	1200	84.241	1571	1330	83.932	1741	1500	83.932	1963	1680	84.241	2199	1920	84.241	2513	80	12.5	1000
		933			1041			1178			1306			1472			1649			1885		9.4	750
		▮			▮			▮			▮			▮			▮			▮		16.7	1500
950	97.596	1105	1060	97.596	1233	1200	97.596	1396	1330	96.448	1547	1500	96.448	1745	1680	97.596	1954	1920	97.596	2234	90	11.1	1000
		829			925			1047			1160			1309			1466			1675		8.3	750
		▮			▮			▮			▮			▮			▮			▮		15.0	1500
950	102.36	995	1060	102.36	1110	1200	102.36	1256	1330	104.3	1393	1500	104.3	1571	1680	104.69	1759	1920	104.69	2010	100	10.0	1000
		746			832			942			1044			1178			1319			1508		7.5	750
		▮			▮			▮			▮			▮			▮			▮		13.4	1500
950	118.59	888	1060	118.59	991	1200	118.59	1122	1330	119.96	1243	1500	119.96	1402	1680	121.28	1571	1920	121.28	1795	112	8.9	1000
		666			743			841			933			1052			1178			1346		6.7	750
		▮			▮			▮			▮			▮			▮			▮		12.0	1500
950	127.06	796	1060	127.06	888	1200	127.06	1005	1330	127.56	1114	1500	127.56	1256	1680	129.08	1407	1920	129.08	1608	125	8.0	1000
		597			666			754			836			942			1055			1206		6.0	750

P2N
P2S

P3N和P3S传动能力表：（i=140~900）

P3N & P3S transmission capacity table: (i=140~900)

n_1 (r/min)	n_{2N} (r/min)	i_N	P3-9			P3-10			P3-11			P3-12			P3-13			P3-14		
			T_{2N} (kN·m)	iex	P_{1N} (kW)	T_{2N} (kN·m)	iex	P_{1N} (kW)	T_{2N} (kN·m)	iex	P_{1N} (kW)	T_{2N} (kN·m)	iex	P_{1N} (kW)	T_{2N} (kN·m)	iex	P_{1N} (kW)	T_{2N} (kN·m)	iex	P_{1N} (kW)
1500	10.7	140	22	146.81	24.8	31	146.81	34.9	42	147.12	47.3	60	142.04	68	83	142.94	94	117	142.94	132
1000	7.1				16.5			23.3			31.5			45			62			88
750	5.4				12.4			17.5			23.7			34			47			66
1500	9.4	160	22	165.95	21.7	31	165.95	30.6	42	165.34	41.4	60	159.64	59	83	161.57	82	117	161.57	115
1000	6.3				14.5			20.4			27.6			39			55			77
750	4.7				10.8			15.3			20.7			30			41			58
1500	8.3	180	22	192.25	19.3	31	192.25	27.2	42	189.99	36.8	60	183.44	53	83	187.19	73	117	187.19	103
1000	5.6				12.9			18.1			24.5			35			48			68
750	4.2				9.6			13.6			18.4			26			36			51
1500	7.5	200	22	210.43	17.3	31	210.43	24.4	42	207.96	33.1	60	200.79	47	83	204.88	65	117	204.88	92
1000	5.0				11.6			16.3			22.1			32			44			62
750	3.8				8.7			12.2			16.6			24			33			46
1500	6.7	225	22	233.57	15.4	31	233.57	21.7	42	230.82	29.4	60	222.86	42	83	227.41	58	117	227.41	82
1000	4.4				10.3			14.5			19.6			28			39			55
750	3.3				7.7			10.9			14.7			21			29			41
1500	6.0	250	22	264.01	13.9	31	364.01	19.6	42	260.9	26.5	60	251.90	38	83	257.04	52	117	257.04	74
1000	4.0				9.3			13.0			17.7			25			35			49
750	3.0				6.9			9.8			13.2			19			26			37
1500	5.4	280	22	305.86	12.4	31	305.86	17.5	42	302.26	23.7	60	291.84	34	83	297.79	47	117	297.79	66
1000	3.6				8.3			11.6			15.8			23			31			44
750	2.7				6.2			8.7			11.8			17			23			33
1500	5.4	280	22	295.21	13.5	31	295.21	17.6	42	295.82	24	60	285.62	34	83	287.42	47	117	287.42	67
1000	3.6				8.3			12			16			23			31			44
750	2.7				6.3			8.8			12			17			24			33
1500	4.8	315	22	333.68	11	31	333.68	16	42	332.46	21	60	320.99	30	83	324.88	42	117	324.88	59
1000	3.2				7.4			10.5			14			20			28			39
750	2.4				5.6			7.8			11			15			21			30
1500	4.2	355	22	386.58	10	31	386.58	14	42	382.03	19	60	368.86	27	83	376.39	37	117	376.39	53
1000	2.8				6.7			9.3			13			18			25			35
750	2.1				5			7			9			13			19			26
1500	3.8	400	22	401.07	8.8	31	401.07	12.4	42	399.60	17	60	385.82	24	83	390.49	33	117	390.49	47
1000	2.5				5.8			8.2			11			16			22			31
750	1.9				4.4			6.2			8			12			17			23
1500	3.3	450	22	464.65	7.8	31	464.65	11	42	459.18	15	60	443.35	21	83	452.4	29	117	452.4	41
1000	2.2				5.2			7.3			10			14			20			28
750	1.7				3.4			5.5			7.4			11			15			21
1500	3.0	500	22	510.01	7	31	510.01	10	42	508.15	13.4	60	490.62	19	83	496.56	26	117	496.56	37
1000	2.0				4.7			6.6			8.9			13			18			25
750	1.5				3.5			5			6.7			10			13			19
1500	2.7	560	22	590.87	6.3	31	590.87	8.8	42	583.92	12	60	563.78	17	83	575.29	24	117	575.29	33
1000	1.8				4.2			6			8			11			16			22
750	1.3				3.1			4.4			6			9			12			17
1500	2.4	630	22	645.65	5.6	31	645.65	7.8	42	643.29	10.6	60	621.11	15	83	628.63	21	117	628.63	30
1000	1.6				3.7			5.2			7			10			14			20
750	1.2				2.8			3.9			5.3			8			10			15
1500	2.1	710	22	748.01	4.5	31	748.01	7	42	739.21	9.4	60	713.72	13	83	728.29	19	117	728.29	26
1000	1.4				3.3			4.5			6.3			9			12			18
750	1.1				2.5			3.5			4.7			7			9			13
1500	1.9	800	22	807.55	4.4	31	807.55	6.2	42	798.04	8.4	60	770.53	12	83	786.25	17	117	786.25	23
1000	1.3				2.9			4.1			5.6			8			11			16
750	0.9				2.2			3.1			4.2			6			8			12
1500	1.7	900	22	935.57	3.4	31	935.57	5.5	42	924.56	7.4	60	892.68	11	83	910.90	15	117	910.90	21
1000	1.1				2.6			3.7			5			7			10			14
750	0.8				1.9			2.7			3.7			5			7			10

P3N
P3S



P3-16			P3-17			P3-18			P3-19			P3-20			P3-21			i_N	n_{2N} (r/min)	n_1 (r/min)
T_{2N} (kN·m)	iex	P_{1N} (kW)	T_{2N} (kN·m)	iex	P_{1N} (kW)	T_{2N} (kN·m)	iex	P_{1N} (kW)	T_{2N} (kN·m)	iex	P_{1N} (kW)	T_{2N} (kN·m)	iex	P_{1N} (kW)	T_{2N} (kN·m)	iex	P_{1N} (kW)			
160	143.08	180	202	143.08	228	244	142.94	275	295	152.47	332	354	152.47	399	392	152.17	442	140	10.7	1500
		120			152			183			222			266			294		7.1	1000
		90			114			137			166			199			221		5.4	750
160	161.73	158	202	161.73	199	244	161.57	241	295	172.34	291	354	172.34	349	392	172.34	386	160	9.4	1500
		105			133			160			194			233			258		6.3	1000
		79			100			120			145			174			193		4.7	750
160	187.37	140	202	187.37	177	244	187.19	214	295	199.66	258	354	199.66	310	392	199.66	343	180	8.3	1500
		93			118			143			172			207			229		5.6	1000
		70			88			107			129			155			172		4.2	750
160	204.45	126	202	204.45	159	244	204.88	192	295	218.54	233	354	218.54	279	392	218.54	309	200	7.5	1500
		84			106			128			155			186			206		5.0	1000
		63			80			96			116			140			155		3.8	750
160	225.98	112	202	225.98	142	244	227.41	171	295	242.57	207	354	242.57	248	392	242.57	275	225	6.7	1500
		75			94			114			138			165			183		4.4	1000
		56			71			86			103			124			137		3.3	750
160	253.97	101	202	253.97	127	244	257.04	154	295	274.18	186	354	274.18	223	392	274.18	247	250	6.0	1500
		67			85			103			124			149			165		4.0	1000
		50			64			77			93			112			124		3.0	750
160	291.84	90	202	291.84	114	244	297.79	137	295	317.65	166	354	317.65	199	392	317.65	221	280	5.4	1500
		60			76			92			111			133			147		3.6	1000
		45			57			69			83			100			110		2.7	750
160	268.53	91	202	268.53	115	244	283.53	139	295	302.43	168	354	302.43	202	392	302.43	223	280	5.4	1500
		61			77			93			112			134			149		3.6	1000
		46			57			69			84			101			112		2.7	750
160	303.53	81	202	303.53	102	244	320.48	123	295	341.48	149	354	341.48	179	392	341.48	198	315	4.8	1500
		54			68			82			100			119			132		3.2	1000
		40			51			62			75			90			99		2.4	750
160	351.65	72	202	351.65	91	244	371.29	110	295	396.04	132	354	396.04	159	392	396.04	176	355	4.2	1500
		48			60			73			88			106			117		2.8	1000
		36			45			55			66			79			88		2.1	750
160	396.27	64	202	396.27	80	244	388.27	97	295	414.16	118	354	414.16	141	392	414.16	156	400	3.8	1500
		43			54			65			78			94			104		2.5	1000
		32			40			49			59			71			78		1.9	750
160	459.1	57	202	459.1	72	244	449.83	86	295	479.82	104	354	479.82	125	392	479.82	139	450	3.3	1500
		38			48			58			70			84			93		2.2	1000
		28			36			43			52			63			69		1.7	750
160	508.18	51	202	508.18	64	244	510.30	78	295	544.32	94	354	544.32	113	392	544.32	125	500	3.0	1500
		34			43			52			63			75			83		2.0	1000
		26			32			39			47			56			62		1.5	750
160	588.75	46	202	588.75	57	244	591.20	69	295	630.61	84	354	630.61	101	392	630.61	112	560	2.7	1500
		30			38			46			56			67			74		1.8	1000
		23			29			35			42			50			56		1.3	750
160	623.03	40	202	623.03	51	244	621.23	62	295	662.65	75	354	662.65	90	392	662.65	99	630	2.4	1500
		27			34			41			50			60			66		1.6	1000
		20			26			31			37			45			50		1.2	750
160	721.81	36	202	721.81	45	244	719.72	55	295	767.70	66	354	767.70	79	392	767.70	88	710	2.1	1500
		24			30			37			44			53			59		1.4	1000
		18			23			27			33			40			44		1.1	750
160	776.02	32	202	776.02	40	244	771.13	49	295	822.54	59	354	822.54	71	392	822.54	78	800	1.9	1500
		21			27			32			39			47			52		1.3	1000
		16			20			24			29			35			39		0.9	750
160	891.73	28	202	891.73	36	244	893.38	43	295	952.94	52	354	952.94	63	392	952.94	69	900	1.7	1500
		19			24			29			35			42			46		1.1	1000
		14			18			22			26			31			35		0.8	750

P3N
P3S

P

P3N和P3S传动能力表：（i=140～900）

P3N & P3S transmission capacity table: (i=140~900)

n_1 (r/min)	n_{2N} (r/min)	i_N	P3-22			P3-23			P3-24			P3-25			P3-26			P3-27		
			T_{2N} (kN·m)	iex	P_{1N} (kW)	T_{2N} (kN·m)	iex	P_{1N} (kW)	T_{2N} (kN·m)	iex	P_{1N} (kW)	T_{2N} (kN·m)	iex	P_{1N} (kW)	T_{2N} (kN·m)	iex	P_{1N} (kW)	T_{2N} (kN·m)	iex	P_{1N} (kW)
1500	10.7	140	450	152.17	507	513	152.79	578	592	152.79	667	684	152.79	711	763	152.79	860	852	152.47	▮
1000	7.1				338			385			445			514			573			640
750	5.4				253			289			333			385			430			480
1500	9.4	160	450	172.34	444	513	171.71	506	592	171.71	584	684	171.71	674	763	171.71	752	852	172.34	▮
1000	6.3				296			337			389			450			501			560
750	4.7				222			253			292			337			376			420
1500	8.3	180	450	199.66	394	513	187.32	450	592	187.32	519	684	197.32	599	763	197.32	669	852	199.66	▮
1000	5.6				263			300			346			400			446			498
750	4.2				197			225			259			300			334			373
1500	7.5	200	450	218.54	355	513	215.97	405	592	215.97	467	684	215.97	539	763	215.97	602	852	218.54	▮
1000	5.0				237			270			311			360			401			448
750	3.8				177			202			233			270			301			336
1500	6.7	225	460	242.57	315	513	239.71	360	592	239.71	415	684	239.71	479	763	239.71	535	82	242.57	597
1000	4.4				210			240			277			320			357			398
750	3.3				158			180			207			240			267			299
1500	6.0	250	450	274.18	284	513	270.95	324	592	270.95	373	684	270.95	432	763	270.95	481	852	274.18	538
1000	4.0				189			216			249			288			321			358
750	3.0				142			162			187			216			241			269
1500	5.4	280	450	317.65	253	513	313.91	289	592	313.91	333	684	313.91	385	763	313.91	430	852	317.65	480
1000	3.6				169			193			222			257			287			320
750	2.7				127			144			167			193			215			240
1500	5.4	280	450	302.43	256	513	295.28	292	592	295.28	337	684	295.28	389	763	295.28	434	852	296.01	485
1000	3.6				171			195			225			260			290			323
750	2.7				128			146			168			195			217			242
1500	4.8	315	450	341.48	228	513	331.86	260	592	331.86	300	684	331.86	346	763	331.86	386	852	334.59	431
1000	3.2				152			173			200			231			257			287
750	2.4				114			130			150			173			193			216
1500	4.2	355	450	396.04	202	513	381.34	230	592	381.34	266	684	381.34	307	763	381.34	343	852	387.63	383
1000	2.8				135			154			177			205			228			255
750	2.1				101			115			133			154			171			191
1500	3.8	400	450	414.16	179	513	426.24	204	592	426.24	236	684	426.24	273	763	426.24	304	852	416.52	339
1000	2.5				120			136			157			182			203			226
750	1.9				90			102			118			136			152			170
1500	3.3	450	450	479.82	159	513	489.8	182	592	489.8	210	684	489.8	242	763	489.8	270	852	482.56	302
1000	2.2				106			121			140			162			180			201
750	1.7				80			91			105			121			135			151
1500	3.0	500	450	544.32	143	513	546.62	164	592	546.62	189	684	546.6	218	763	546.6	243	852	545.35	272
1000	2.0				96			109			126			145			162			181
750	1.5				72			82			94			109			122			136
1500	2.7	560	450	630.61	128	513	628.12	146	592	628.12	168	684	628.12	195	763	628.12	217	852	631.81	242
1000	1.8				85			97			112			130			145			162
750	1.3				64			73			84			97			109			121
1500	2.4	630	450	662.65	114	513	670.15	130	592	670.15	150	684	670.15	173	763	670.15	193	852	662.65	216
1000	1.6				76			87			100			115			129			144
750	1.2				57			65			75			87			97			108
1500	2.1	710	450	767.70	101	513	770.08	115	592	770.08	133	684	770.08	154	763	770.08	171	852	767.70	191
1000	1.4				67			77			89			102			114			128
750	1.1				51			58			66			77			86			96
1500	1.9	800	450	822.54	90	513	829.8	102	592	829.8	118	684	829.8	136	763	829.8	152	852	822.54	170
1000	1.3				60			68			79			91			110			113
750	0.9				45			51			59			68			76			85
1500	1.7	900	450	952.94	80	513	961.35	91	592	961.35	105	684	961.35	121	763	961.35	135	852	952.94	151
1000	1.1				53			61			70			81			90			101
750	0.8				40			45			52			61			68			75

P3N
P3S



P3-28			P3-29			P3-30			P3-31			P3-32			P3-33			P3-34			i_N	n_{2N} (r/min)	n_1 (r/min)
T_{2N} (kN·m)	iex	P_{1N} (kW)	T_{2N} (kN·m)	iex	P_{1N} (kW)	T_{2N} (kN·m)	iex	P_{1N} (kW)	T_{2N} (kN·m)	iex	P_{1N} (kW)	T_{2N} (kN·m)	iex	P_{1N} (kW)	T_{2N} (kN·m)	iex	P_{1N} (kW)	T_{2N} (kN·m)	iex	P_{1N} (kW)			
		▮			▮			▮			▮			▮			▮			▮		10.7	1500
950	152.47	714	1060	152.47	796	1200	152.47	901	1330	152.79	999	1500	152.79	1127	1680	153.90	1262	1920	153.90	1442	140	7.1	1000
		535			597			676			749			845			946			1082		5.4	750
		▮			▮			▮			▮			▮			▮			▮		9.4	1500
950	172.34	624	1060	172.34	697	1200	172.34	789	1330	171.71	874	1500	171.71	986	1680	173.96	1104	1920	173.96	1262	160	6.3	1000
		468			522			591			656			739			828			946		4.7	750
		▮			▮			▮			▮			▮			▮			▮		8.3	1500
950	199.66	555	1060	199.66	619	1200	199.66	701	1330	197.32	777	1500	197.32	876	1680	201.54	981	1920	201.54	1122	180	5.6	1000
		416			464			526			583			657			736			841		4.2	750
		▮			▮			▮			▮			▮			▮			▮		7.5	1500
950	218.54	499	1060	218.54	557	1200	218.54	631	1330	215.97	699	1500	215.97	789	1680	219.91	883	1920	219.91	1009	200	5.0	1000
		375			418			473			524			591			662			757		3.8	750
		666			743			841			932			1051			1178			1346		6.7	1500
950	242.57	444	1060	242.57	495	1200	242.57	561	1330	239.71	622	1500	239.71	701	1680	243.07	785	1920	243.07	897	225	4.4	1000
		333			372			421			466			526			589			673		3.3	750
		599			669			757			839			946			1060			1211		6.0	1500
950	274.18	400	1060	274.18	446	1200	274.18	505	1330	270.95	559	1500	270.95	631	1680	273.18	707	1920	273.18	808	250	4.0	1000
		300			334			379			420			473			530			606		3.0	750
		535			597			676			749			845			946			1082		5.4	1500
950	317.65	357	1060	317.65	398	1200	317.65	451	1330	313.91	499	1500	313.91	563	1680	313.91	631	1920	313.91	721	280	3.6	1000
		268			299			338			375			422			473			541		2.7	750
		541			603			683			757			854			956			1093		5.4	1500
950	296.01	361	1060	296.01	402	1200	296.01	455	1330	300.72	505	1500	300.72	569	1680	292.05	638	1920	292.05	729	280	3.6	1000
		270			302			342			379			427			478			546		2.7	750
		481			536			607			673			759			850			971		4.8	1500
950	334.59	320	1060	334.59	358	1200	334.59	405	1330	337.97	449	1500	337.97	506	1680	330.11	567	1920	330.11	648	315	3.2	1000
		240			268			304			336			379			425			486		2.4	750
		427			476			539			597			673			754			862		4.2	1500
950	387.63	284	1060	387.63	317	1200	387.63	359	1330	388.37	398	1500	388.37	449	1680	382.45	503	1920	382.45	575	355	2.8	1000
		213			238			269			299			337			377			431		2.1	750
		379			422			478			530			598			669			765		3.8	1500
950	416.52	252	1060	416.52	282	1200	416.52	319	1330	426.24	353	1500	426.24	398	1680	417.18	446	1920	417.18	510	400	2.5	1000
		189			211			239			265			299			335			383		1.9	750
		336			375			425			471			531			595			680		3.3	1500
950	482.56	224	1060	482.56	250	1200	482.56	283	1330	489.80	314	1500	489.80	354	1680	483.31	397	1920	483.31	453	450	2.2	1000
		168			188			213			236			266			298			340		1.7	750
		303			338			383			424			478			536			612		3.0	1500
950	545.35	202	1060	545.35	225	1200	545.35	255	1330	546.60	283	1500	546.60	319	1680	535.90	357	1920	535.90	408	500	2.0	1000
		151			169			191			212			239			268			306		1.5	750
		270			302			342			379			427			478			546		2.7	1500
950	631.81	180	1060	631.81	201	1200	631.81	228	1330	628.12	252	1500	628.12	285	1680	620.86	319	1920	620.86	364	560	1.8	1000
		135			151			171			189			213			239			273		1.3	750
		240			268			304			336			379			425			486		2.4	1500
950	662.65	160	1060	662.65	179	1200	662.65	202	1330	670.15	224	1500	670.15	253	1680	657.74	283	1920	657.74	324	630	1.6	1000
		120			134			152			168			190			213			243		1.2	750
		213			238			269			299			337			377			431		2.1	1500
950	767.70	142	1060	767.70	159	1200	767.70	180	1330	770.08	199	1500	770.08	226	1680	762.02	251	1920	762.02	287	710	1.4	1000
		107			119			135			149			168			189			215		1.1	750
		189			211			239			265			299			335			383		1.9	1500
950	822.54	126	1060	822.54	141	1200	822.54	159	1330	827.92	177	1500	827.92	199	1680	819.53	223	1920	819.53	255	800	1.3	1000
		95			106			120			132			149			167			191		0.9	750
		168			188			213			236			266			298			340		1.7	1500
950	952.94	112	1060	952.94	125	1200	952.94	142	1330	959.17	157	1500	959.17	177	1680	941.73	198	1920	941.73	227	900	1.1	1000
		84			94			106			118			133			149			170		0.8	750

P3N
P3S

P

P2L传动能力表：（i=31.5～100）

P2L transmission capacity table: (i=31.5 ~ 100)

n_1 (r/min)	n_{2N} (r/min)	i_N	P2-9			P2-10			P2-11			P2-12			P2-13		
			T_{2N} (kN·m)	iex	P_{1N} (kW)	T_{2N} (kN·m)	iex	P_{1N} (kW)	T_{2N} (kN·m)	iex	P_{1N} (kW)	T_{2N} (kN·m)	iex	P_{1N} (kW)	T_{2N} (kN·m)	iex	P_{1N} (kW)
1500	47.6	31.5	22	32.5353	111	31	32.5353	156	42	32.8413	212	60	31.7089	302	83	31.6775	418
1000	31.7				74			104			141			202			279
750	23.8				55			78			106			151			209
1500	42.3	35.5	22	35.6114	98	31	35.6114	139	42	35.8344	188	60	34.5987	268	83	34.6723	345
1000	28.2				66			92			125			179			247
750	21.1				49			69			94			134			173
1500	37.5	40	22	39.5264	87	31	39.5264	123	42	39.6083	167	60	38.2424	238	83	38.4842	306
1000	25.0				58			82			111			159			204
750	18.8				44			62			83			119			153
1500	33.3	45	22	43.882	78	31	43.882	109	42	43.4177	148	60	41.9206	212	83	42.1856	293
1000	22.2				52			73			99			141			195
750	16.7				39			55			74			106			146
1500	30.0	50	22	50.4204	70	31	50.4204	98	42	50.5248	133	60	48.7826	191	83	49.0910	264
1000	20.0				47			66			89			127			176
750	15.0				35			49			67			95			132
1500	26.8	56	22	55.7278	62	31	55.7278	88	42	55.8432	119	60	53.9176	170	83	54.2585	235
1000	17.9				42			59			79			113			157
750	13.4				31			44			60			85			118
1500	23.8	63	22	60.4521	55	31	60.4521	78	42	60.5773	106	60	58.4884	151	83	62.3263	209
1000	15.9				37			52			71			101			139
750	11.9				28			39			53			76			105
1500	21.1	71	22	69.6115	49	31	69.6115	69	42	69.7557	94	60	67.3503	134	83	67.7761	186
1000	14.1				33			46			63			89			124
750	10.6				25			35			47			67			93
1500	18.8	80	22	79.0528	44	31	79.0528	62	42	79.9667	83	60	77.2092	119	83	77.6973	165
1000	12.5				29			41			56			79			110
750	9.4				22			31			42			60			82
1500	16.7	90	22	86.2394	39	31	86.2394	55	42	86.418	74	60	83.438	106	83	83.9656	146
1000	11.1				26			36			49			71			98
750	8.3				19			27			37			53			73
1500	15.0	100	22	98.2172	35	31	98.2172	49	42	98.4205	67	60	95.0266	95	83	95.6275	132
1000	10.0				23			33			44			64			88
750	7.5				17			25			33			48			66

P2L



P2-14			P2-16			P2-17			P2-18			P2-19			i_N	n_{2N} (r/min)	n_1 (r/min)
T_{2N} (kN·m)	iex	P_{1N} (kW)	T_{2N} (kN·m)	iex	P_{1N} (kW)	T_{2N} (kN·m)	iex	P_{1N} (kW)	T_{2N} (kN·m)	iex	P_{1N} (kW)	T_{2N} (kN·m)	iex	P_{1N} (kW)			
117	31.6775	510	160	31.4135	806	202	31.4135	865	244	31.4286	1230	295	33.5237	1487	31.5	47.6	1500
		340			538			577			820			991		31.7	1000
		255			403			433			615			743		23.8	750
117	34.6723	487	160	34.3835	716	202	34.3835	858	244	34.3999	1091	295	36.6933	1319	35.5	42.3	1500
		324			477			572			728			880		28.2	1000
		243			358			429			546			660		21.1	750
117	38.4842	432	160	38.1635	635	202	38.1635	802	244	38.1819	969	295	40.7272	1171	40	37.5	1500
		288			423			535			646			781		25.0	1000
		216			318			401			484			585		18.8	750
117	42.1856	413	160	41.834	565	202	41.834	713	244	43.149	861	295	46.0254	1041	45	33.3	1500
		275			376			475			574			694		22.2	1000
		206			282			356			430			520		16.7	750
117	49.091	372	160	48.6818	508	202	48.6818	641	244	49.091	775	295	52.3636	937	50	30.0	1500
		248			339			428			517			625		20.0	1000
		186			254			321			387			468		15.0	750
117	54.2585	332	160	53.8063	454	202	53.8063	573	244	54.8664	692	295	58.524	836	56	26.8	1500
		221			302			382			461			558		17.9	1000
		166			227			286			346			418		13.4	750
117	62.3263	295	160	61.8069	403	202	61.8069	509	244	62.3263	615	295	66.4812	743	63	23.8	1500
		197			269			339			410			496		15.9	1000
		147			202			255			307			372		11.9	750
117	67.7761	262	160	67.2113	358	202	67.2113	452	244	67.7761	546	295	72.2943	660	71	21.1	1500
		174			239			301			364			440		14.1	1000
		131			179			226			273			330		10.6	750
117	77.6973	232	160	77.0498	318	202	77.0498	401	244	77.6973	484	295	82.8769	585	80	18.8	1500
		155			212			267			323			390		12.5	1000
		116			159			200			242			293		9.4	750
117	83.9656	206	160	83.2658	282	202	83.2658	356	244	83.9656	430	295	89.563	520	90	16.7	1500
		138			188			238			287			347		11.1	1000
		103			141			178			215			260		8.3	750
117	95.6275	186	160	94.8305	254	202	94.8305	321	244	95.6275	387	295	102.0023	468	100	15.0	1500
		124			169			214			258			312		10.0	1000
		93			127			160			194			234		7.5	750

P2L

注: 必需采用强制润滑。

Note: Forced lubrication required.

P2L传动能力表： （i=31.5～100）　　P2L transmission capacity table: （i=31.5～100）

n_1 (r/min)	n_{2N} (r/min)	i_N	P2-20			P2-21			P2-22			P2-23			P2-24			P2-25		
			T_{2N} (kN·m)	iex	P_{1N} (kW)	T_{2N} (kN·m)	iex	P_{1N} (kW)	T_{2N} (kN·m)	iex	P_{1N} (kW)	T_{2N} (kN·m)	iex	P_{1N} (kW)	T_{2N} (kN·m)	iex	P_{1N} (kW)	T_{2N} (kN·m)	iex	P_{1N} (kW)
1500	47.6	31.5	354	33.5237	1517	392	33.5237	1976	450	33.5237	2268	513	33.8391		592	33.8391		684	33.8391	
1000	31.7				1011			1317			1512			1724			1989			2298
750	23.8				758			988			1134			1293			1492			1724
1500	42.3	35.5	354	36.6933	1504	392	36.6933	1753	450	36.6933	2013	513	36.9231		592	36.9231		684	36.9231	
1000	28.2				1003			1169			1342			1530			1712			2040
750	21.1				752			877			1006			1147			1284			1530
1500	37.5	40	354	40.7272	1405	392	40.7272	1556	450	40.7272	1786	513	40.8116		592	40.8116		684	40.8116	
1000	25.0				937			1037			1191			1358			1567			1810
750	18.8				703			778			883			1018			1175			1358
1500	33.3	45	354	46.0254	1249	392	46.0254	1383	450	46.0254	1588	513	46.1208	1810	592	46.1208	2089	684	46.1208	
1000	22.2				833			922			1059			1207			1393			1609
750	16.7				625			692			794			905			1044			1207
1500	30.0	50	354	52.3636	1124	392	52.3636	1245	450	52.3636	1429	513	52.472	1629	592	52.472	1880	684	52.1365	
1000	20.0				749			830			953			1086			1253			1448
750	15.0				562			622			714			815			940			1086
1500	26.8	56	354	58.524	1004	392	58.524	1111	450	58.524	1276	513	58.6452	1455	592	58.6452	1678	684	58.6452	
1000	17.9				669			741			851			970			1119			1293
750	13.4				502			556			638			727			839			970
1500	23.8	63	354	66.4812	892	392	66.4812	988	450	66.4812	1134	513	66.6189	1293	592	66.6189	1492	684	66.6189	1724
1000	15.9				595			659			756			862			995			1149
750	11.9				446			494			567			646			746			862
1500	21.1	71	354	72.2943	792	392	72.2943	877	450	72.2943	1006	513	72.4441	1147	592	72.4441	1324	684	72.4441	1530
1000	14.1				528			584			671			765			883			1020
750	10.6				396			438			503			574			662			765
1500	18.8	80	354	82.8769	703	392	82.8769	778	450	82.8769	893	513	83.0486	1018	592	83.0486	1175	684	83.0486	1358
1000	12.5				468			519			595			679			783			905
750	9.4				351			389			447			509			587			679
1500	16.7	90	354	89.563	625	392	89.563	692	450	89.563	794	513	89.7486	905	592	89.7486	1044	684	89.7486	1207
1000	11.1				416			461			529			603			696			804
750	8.3				312			346			397			453			522			603
1500	15.0	100	354	102.0023	562	392	102.0023	622	450	102.0023	714	513	102.2136	815	592	102.2136	940	684	102.2136	1086
1000	10.0				375			415			476			543			627			724
750	7.5				281			311			357			407			470			543

注：□必需采用强制润滑。　　Note: □ Forced lubrication required.

P2L



P2-26			P2-27			P2-28			P2-29			P2-30			P2-31 ~ P2-34			i_N	n_{2N} (r/min)	n_1 (r/min)
T_{2N} (kN·m)	iex	P_{1N} (kW)	T_{2N} (kN·m)	iex	P_{1N} (kW)	T_{2N} (kN·m)	iex	P_{1N} (kW)	T_{2N} (kN·m)	iex	P_{1N} (kW)	T_{2N} (kN·m)	iex	P_{1N} (kW)	T_{2N} (kN·m)	iex	P_{1N} (kW)			
																			47.6	1500
763	33.8391	2564	852	33.5237	2863	950	33.5237	2937	1060	33.5237		1200	33.5237					31.5	31.7	1000
		1923			2147			2203											23.8	750
																			42.3	1500
763	36.9231	2275	852	36.6933	2540	950	36.6933	2833	1060	36.6933		1200	36.6933					35.5	28.2	1000
		1706			1905			2124											21.1	750
																			37.5	1500
763	40.8116	2019	852	40.7272	2255	950	40.7272	2514	1060	40.7272		1200	40.7272					40	25.0	1000
		1514			1691			1885											18.8	750
																			33.3	1500
763	46.1208	1795	852	46.0254	2004	950	46.0254	2235	1060	46.0254		1200	46.0254					45	22.2	1000
		1346			1503			1676			1870			2117				16.7	750
															按客户				30.0	1500
763	52.1365	1615	852	52.0288	1804	950	52.0288	2011	1060	52.0288		1200	52.0288		要求供货			50	20.0	1000
		1211			1353			1508			1683			1905	On request.				15.0	750
																			26.8	1500
763	58.6452	1442	852	58.524	1610	950	58.524	1796	1060	58.524	2004	1200	58.524	2268				56	17.9	1000
		1082			1208			1347			1503			1701					13.4	750
		1923			2147			2394											23.8	1500
763	66.6189	1282	852	66.4812	1432	950	66.4812	1596	1060	66.4812	1781	1200	66.4812	2016				63	15.9	1000
		961			1074			1197			1336			1512					11.9	750
		1706			1905			2124											21.1	1500
763	72.4441	1138	852	72.2943	1270	950	72.2943	1416	1060	72.2943	1580	1200	72.2943	1789				71	14.1	1000
		853			953			1062			1185			1342					10.6	750
		1514			1691			1885											18.8	1500
763	83.0486	1010	852	82.8769	1127	950	82.8769	1257	1060	82.8769	1403	1200	82.8769	1588				80	12.5	1000
		757			845			943			1052			1191					9.4	750
		1346			1503			1676			1870			2117					16.7	1500
763	89.7486	897	852	89.563	1002	950	89.563	1117	1060	89.563	1247	1200	89.563	1411				90	11.1	1000
		673			752			838			935			1059					8.3	750
		1211			1353			1508			1683			1905					15.0	1500
763	102.2136	808	852	102.0023	902	950	102.0023	1006	1060	102.0023	1122	1200	102.0023	1270				100	10.0	1000
		606			676			754			842			953					7.5	750

注：□必需采用强制润滑。

Note: □ Forced lubrication required.

P2L

P

P2K传动能力表： (i=112~560)

P2K transmission capacity table: (i=112~560)

n_1 (r/min)	n_{2N} (r/min)	i_N	P2-9			P2-10			P2-11			P2-12			P2-13			P2-14		
			T_{2N} (kN·m)	iex	P_{1N} (kW)	T_{2N} (kN·m)	iex	P_{1N} (kW)	T_{2N} (kN·m)	iex	P_{1N} (kW)	T_{2N} (kN·m)	iex	P_{1N} (kW)	T_{2N} (kN·m)	iex	P_{1N} (kW)	T_{2N} (kN·m)	iex	P_{1N} (kW)
1500	13.4	112	22	111.25	30.9	31	111.25	43.6	42	111.83	59.0	60	107.97	84	83	107.97	117	117	107.76	164
1000	8.9				20.6			29.0			39.4			56			78			110
750	6.7				15.5			21.8			29.5			42			58			82
1500	12.0	125	22	125.75	27.7	31	125.75	39.0	42	125.68	52.9	60	121.35	76	83	121.8	105	117	121.8	147
1000	8.0				18.5			26.0			35.3			50			70			98
750	6.0				13.9			19.5			26.4			38			52			74
1500	10.7	140	22	145.69	24.7	31	145.69	34.9	42	144.42	47.2	60	139.44	67	83	141.11	93	117	141.11	132
1000	7.1				16.5			23.2			31.5			45			62			88
750	5.4				12.4			17.4			23.6			34			47			66
1500	9.4	160	22	157.28	21.6	31	157.28	30.5	42	155.27	41.3	60	149.91	59	83	151.19	82	117	151.19	115
1000	6.3				14.4			20.3			27.5			39			54			77
750	4.7				10.8			15.3			20.7			30			41			58
1500	8.3	180	22	175.77	19.2	31	175.77	27.1	42	173.52	36.7	60	167.54	52	83	167.85	73	117	167.85	102
1000	5.6				12.8			18.1			24.5			35			48			68
750	4.2				9.6			13.6			18.4			26			36			51
1500	7.5	200	22	203.53	17.3	31	203.53	24.4	42	200.92	33.1	60	193.99	47	83	192.86	65	117	192.86	92
1000	5.0				11.5			16.3			22.0			31			44			61
750	3.8				8.7			12.2			16.5			24			33			46
1500	6.7	225	22	223.22	15.4	31	223.22	21.7	42	220.36	29.4	60	212.76	42	83	213.16	58	117	213.16	82
1000	4.4				10.3			14.5			19.6			28			39			55
750	3.3				7.7			10.8			14.7			21			29			41
1500	6.0	250	22	242.15	13.9	31	242.15	19.5	42	239.04	26.4	60	230.8	38	83	231.23	52	117	231.23	74
1000	4.0				9.2			13.0			17.6			25			35			49
750	3.0				6.9			9.8			13.2			19			26			37
1500	5.4	280	22	278.84	12.4	31	278.84	17.4	42	275.26	23.6	60	265.77	34	83	266.26	47	117	266.26	66
1000	3.6				8.2			11.6			15.7			22			31			44
750	2.7				6.2			8.7			11.8			17			23			33
1500	4.7	320	22	316.65	10.8	31	316.65	15.3	42	312.6	20.7	60	301.82	30	83	302.38	41	117	302.38	58
1000	3.1				7.2			10.2			13.8			20			76			38
750	2.3				5.4			7.6			10.3			15			20			29
1500	4.2	360	22	345.44	9.6	31	345.44	13.6	42	341.01	18.4	60	329.25	26	83	329.86	36	117	329.86	51
1000	2.8				6.4			9.0			12.2			17			24			34
750	2.1				4.8			6.8			9.2			13			18			26
1500	3.8	400	22	393.42	8.7	31	393.42	12.2	42	388.38	16.5	60	374.98	24	83	375.68	33	117	375.68	46
1000	2.5				5.8			8.1			11.0			16			22			31
750	1.9				4.3			6.1			8.3			12			16			23
1500	3.3	450	22	442.27	7.7	31	442.27	10.8	42	436.6	14.7	60	421.54	21	83	422.33	29	117	422.33	41
1000	2.2				5.1			7.2			9.8			14			19			27
750	1.7				3.8			5.4			7.3			10			15			20
1500	3.0	500	22	487.63	6.9	31	487.63	9.8	42	481.38	13.2	60	464.78	19	83	465.64	26	117	465.64	37
1000	2.0				4.6			6.5			8.8			13			17			25
750	1.5				3.5			4.9			6.6			9			13			18
1500	2.7	560	按客户要求供货 On request																	
1000	1.8																			
750	1.3																			

P2K



P2-16			P2-17			P2-18			P2-19			P2-20			i_N	n_{2N} (r/min)	n_1 (r/min)
T_{2N} (kN·m)	iex	P_{1N} (kW)	T_{2N} (kN·m)	iex	P_{1N} (kW)	T_{2N} (kN·m)	iex	P_{1N} (kW)	T_{2N} (kN·m)	iex	P_{1N} (kW)	T_{2N} (kN·m)	iex	P_{1N} (kW)			
160	108.47	225	202	108.47	284	244	107.76	343	295	114.94	415	354	114.94	498	112	13.4	1500
		150			189			229			276			332		8.9	1000
		112			142			171			207			249		6.7	750
160	122.6	201	202	122.6	254	244	121.8	307	295	129.92	372	354	129.92	446	125	12.0	1500
		134			170			205			248			297		8.0	1000
		101			127			154			186			223		6.0	750
160	142.04	180	202	1442.04	227	244	141.11	274	295	150.52	332	354	150.52	398	140	10.7	1500
		120			151			183			221			265		7.1	1000
		90			114			137			166			199		5.4	750
160	153.05	157	202	153.05	199	244	151.19	240	295	161.27	290	354	161.27	348	160	9.4	1500
		105			132			160			193			232		6.3	1000
		79			99			120			145			174		4.7	750
160	167.77	140	202	167.77	177	244	165.73	213	295	176.78	258	354	176.78	310	180	8.3	1500
		93			118			142			172			206		5.6	1000
		70			88			107			129			155		4.2	750
160	195.23	126	202	195.23	159	244	192.86	192	295	205.71	232	354	205.71	279	200	7.5	1500
		84			106			128			155			186		5.0	1000
		63			79			96			116			139		3.8	750
160	215.79	112	202	215.79	141	244	213.16	171	295	227.37	206	354	227.37	248	225	6.7	1500
		75			94			114			138			165		4.4	1000
		56			71			85			103			124		3.3	750
160	234.08	101	202	234.08	127	244	244.85	154	295	261.18	186	354	261.18	223	250	6.0	1500
		67			85			102			124			149		4.0	1000
		50			64			77			93			111		3.0	750
160	269.55	90	202	269.55	114	244	266.26	137	295	284.01	166	354	284.01	199	280	5.4	1500
		60			76			91			111			133		3.6	1000
		45			57			69			83			100		2.7	750
160	309	79	202	309	99	244	305.24	120	295	325.59	145	354	325.59	174	320	4.7	1500
		52			66			80			97			116		3.1	1000
		39			50			60			73			87		2.3	750
160	333.93	70	202	333.93	88	244	329.86	107	295	351.86	129	354	351.86	155	360	4.2	1500
		47			59			71			86			103		2.8	1000
		35			44			53			64			77		2.1	750
160	380.31	63	202	380.31	79	244	375.68	96	295	400.72	116	354	400.72	139	400	3.8	1500
		42			53			64			77			93		2.5	1000
		31			40			48			58			70		1.9	750
160	427.53	56	202	427.53	71	244	422.33	85	295	450.48	103	354	450.48	124	450	3.3	1500
		37			47			57			69			83		2.2	1000
		28			35			43			52			62		1.7	750
160	471.38	50	202	471.38	64	244	465.64	77	295	496.68	93	354	496.68	111	500	3.0	1500
		34			42			51			62			74		2.0	1000
		25			32			38			46			56		1.5	750
按客户要求供货 On request															560	2.7	1500
																1.8	1000
																1.3	750

P2K

P3K传动能力表：（i=560～4000）　　P3K transmission capacity table:（i=560～4000）

n_1 (r/min)	n_{2N} (r/min)	i_N	P3-9			P3-10			P3-11			P3-12			P3-13		
			T_{2N} (kN·m)	iex	P_{1N} (kW)	T_{2N} (kN·m)	iex	P_{1N} (kW)	T_{2N} (kN·m)	iex	P_{1N} (kW)	T_{2N} (kN·m)	iex	P_{1N} (kW)	T_{2N} (kN·m)	iex	P_{1N} (kW)
1500	2.68	560	22	566.22	6.3	31	566.22	9	42	567.4	12	60	547.83	17	83	551.29	24
1000	1.79				4.2			6			8			11			16
750	1.34				3.1			4.4			6			9			12
1500	2.38	630	22	640.02	5.6	31	640.02	7.8	42	637.68	11	60	615.69	15	83	623.14	21
1000	1.59				3.7			5.2			7			10			14
750	1.19				2.8			3.9			5			8			11
1500	2.11	710	22	700.53	5.0	31	700.53	7	42	697.96	9	60	673.9	14	83	682.06	19
1000	1.41				3.3			4.5			6			9			12
750	1.06				2.5			3.5			5			7			9
1500	1.88	800	22	777.54	4.4	31	777.54	6	42	774.7	8	60	747.98	12	83	757.04	17
1000	1.25				2.9			4			6			8			11
750	0.94				2.2			3			4			6			8
1500	1.67	900	22	878.88	3.9	31	878.88	5.5	42	875.66	7.5	60	845.46	11	83	855.70	15
1000	1.11				2.6			3.7			5			7			10
750	0.83				2.0			2.7			3.7			5			7
1500	1.50	1000	22	982.19	3.5	31	982.19	5	42	978.6	6.7	60	944.85	10	83	956.3	13
1000	1.00				2.3			3.3			4.5			6			9
750	0.75				1.8			2.5			3.4			5			7
1500	1.34	1120	22	1137.3	3.1	31	1137.3	4.4	42	1133.1	6	60	1094	9	83	1107.3	12
1000	0.89				2.1			2.9			4			6			8
750	0.67				1.6			2.2			3			4.5			6
1500	1.20	1250	22	1247.3	2.8	31	1247.3	4.0	42	1242.8	5.4	60	1199.9	8	83	1214.4	11
1000	0.80				1.9			2.6			3.6			5			7
750	0.60				1.4			2.0			2.7			4			5
1500	1.07	1400	22	1351.1	2.5	31	1351.1	3.5	42	1348.1	4.8	60	1301.6	7	83	1317.4	4.9
1000	0.71				1.7			2.4			3.2			5			6
750	0.54				1.3			1.8			2.4			3.5			4.5
1500	0.94	1600	22	1558.1	2.2	31	1558.1	3.1	42	1552.4	4.2	60	1498.9	6	83	1517	8
1000	0.63				1.5			2.1			2.8			4			6
750	0.47				1.1			1.5			2.1			3			4
1500	0.83	1800	22	1769.4	2.0	31	1769.4	2.8	42	1762.9	3.7	60	1702.1	5	83	1722.8	7
1000	0.56				1.3			1.8			2.5			4			5
750	0.42				1.0			1.4			1.9			2.7			3.7
1500	0.75	2000	22	1930.3	1.8	31	1930.3	2.5	42	1923.2	3.4	60	1856.9	4.8	83	1879.4	6.6
1000	0.50				1.2			1.7			2.2			3.2			4.4
750	0.38				0.9			1.2			1.7			2.4			3.3
1500	0.67	2240	22	2198.4	1.6	31	2198.4	2.2	42	2190.3	3.0	60	2114.8	4.3	83	2140.4	5.9
1000	0.45				1.0			1.5			2.0			2.9			3.9
750	0.33				0.8			1.1			1.5			2.1			3.0
1500	0.60	2500	22	2471.3	1.4	31	2471.3	2.0	42	2462.3	2.7	60	2377.4	3.8	83	2406.1	5.3
1000	0.40				0.9			1.3			1.8			2.6			3.5
750	0.30				0.7			1.0			1.3			1.9			2.7
1500	0.54	2800	22	2724.8	1.3	31	2724.8	1.8	42	2714.8	2.4	60	2621.2	3.4	83	2652.9	4.7
1000	0.36				0.8			1.2			1.6			2.3			3.2
750	0.27				0.6			0.9			1.2			1.7			2.4
1500	0.48	3150	22	3105	1.1	31	3104.9	1.6	42	3093.6	2.1	60	2986.9	3.0	83	3023.1	4.2
1000	0.32				0.7			1.0			1.4			2.0			2.8
750	0.24				0.6			0.8			1.1			1.5			2.1
1500	0.42	3550	22	3597.2	1.0	31	3597.2	1.4	42	3584.1	1.9	60	3460.5	2.7	83	3502.4	3.7
1000	0.28				0.7			0.9			1.3			1.8			2.5
750	0.21				0.5			0.7			0.9			1.4			1.9
1500	0.38	4000	22	4167.5	0.9	31	4167.5	1.2	42	4118.5	1.7	60	3976.5	2.4	83	4057.6	3.3
1000	0.25				0.6			0.8			1.1			1.6			4.2
750	0.19				0.4			0.6			0.8			1.2			1.7

P3K



P3-14			P3-16			P3-17			P3-18			P3-19			i_N	n_{2N} (r/min)	n_1 (r/min)
T_{2N} (kN·m)	iex	P_{1N} (kW)	T_{2N} (kN·m)	iex	P_{1N} (kW)	T_{2N} (kN·m)	iex	P_{1N} (kW)	T_{2N} (kN·m)	iex	P_{1N} (kW)	T_{2N} (kN·m)	iex	P_{1N} (kW)			
117	551.29	33	160	551.25	46	202	551.25	58	244	544.28	70	295	580.56	84	560	2.68	1500
		22			30			38			46			56		1.79	1000
		17			23			29			35			42		1.34	750
117	623.14	30	160	623.09	41	202	623.09	51	244	615.21	62	295	656.22	75	630	2.38	1500
		20			27			34			41			50		1.59	1000
		15			20			26			31			37		1.19	750
117	682.06	26	160	679.88	36	202	679.88	45	244	673.37	55	295	718.27	66	710	2.11	1500
		18			24			30			37			44		1.41	1000
		13			18			23			27			33		1.06	750
117	757.04	23	160	751.48	32	202	751.48	40	244	747.4	49	295	797.23	59	800	1.88	1500
		16			21			27			32			39		1.25	1000
		12			16			20			24			29		0.94	750
117	855.70	21	160	844.56	28	202	844.56	36	244	844.81	43	295	901.13	52	900	1.67	1500
		14			19			24			29			35		1.11	1000
		10			14			18			22			26		0.83	750
117	956.3	19	160	943.84	26	202	943.84	32	244	937.9	39	295	1000.4	47	1000	1.50	1500
		12			17			22			26			31		1.00	1000
		9			13			16			19			24		0.75	750
117	1107.3	17	160	1092.4	23	202	1092.9	29	244	1077.6	35	295	1149.5	42	1120	1.34	1500
		11			15			19			23			28		0.89	1000
		8			11			14			17			21		0.67	750
117	1214.4	15	160	1198.6	20	202	1198.6	26	244	1191.1	31	295	1270.5	38	1250	1.20	1500
		10			14			17			21			25		0.80	1000
		7			10			13			16			19		0.60	750
117	1317.4	13	160	1300.2	18	202	1300.2	23	244	1292.1	28	295	1378.2	34	1400	1.07	1500
		9			12			15			19			22		0.71	1000
		7			9			12			14			17		0.54	750
117	1517	12	160	1497.3	16	202	1497.3	20	244	1487.8	24	295	1587	29	1600	0.94	1500
		8			11			13			16			20		0.63	1000
		6			8			10			12			15		0.47	750
117	1722.8	10	160	1700.3	14	202	1700.3	18	244	1689.6	22	295	1802.3	26	1800	0.83	1500
		7			9			12			14			17		0.56	1000
		5.2			7.1			9			11			13		0.42	750
117	1879.4	9.4	160	1854.9	12.8	202	1854.9	16	244	1843.2	19	295	1966.1	24	2000	0.75	1500
		6.2			8.5			11			13			16		0.50	1000
		4.7			6.4			8			10			12		0.38	750
117	2140.4	8.3	160	2112.5	11.4	202	2112.5	14	244	2099.2	17	295	2239.2	21	2240	0.67	1500
		5.6			7.6			10			12			14		0.45	1000
		4.2			5.7			7.2			8.7			10.5		0.33	750
117	2406.1	7.5	160	2374.8	10.2	202	2374.8	12.9	244	2359.9	16	295	2517.2	19	2500	0.60	1500
		5.0			6.8			8.6			10.4			12.6		0.40	1000
		3.7			5.1			6.5			7.8			9.4		0.30	750
117	2652.9	6.7	160	2618.4	9.1	202	2618.4	12	244	2601.9	14	295	2775.4	17	2800	0.54	1500
		4.5			6.1			7.7			9.3			11.2		0.36	1000
		3.3			4.6			5.8			7.0			8.4		0.27	750
117	3023.1	5.9	160	2983.8	8.1	202	2983.8	10.2	244	2965	12	295	3162.6	15	3150	0.48	1500
		4.0			5.4			6.8			8.3			10		0.32	1000
		3.0			4.1			5.1			6.2			7.5		0.24	750
117	3502.4	5.3	160	3428.7	7.2	202	3428.7	9.1	244	3435	11	295	3664	13	3550	0.42	1500
		3.5			4.8			6.1			7.3			8.9		0.28	1000
		2.6			3.6			4.5			5.5			6.6		0.21	750
117	4057.6	4.7	160	3972.2	6.4	202	3972.2	8.1	244	3979.6	9.7	295	4244.9	12	4000	0.38	1500
		3.1			4.3			5.4			6.5			7.9		0.25	1000
		2.3			3.2			4.0			4.9			5.9		0.19	750

P3K

P

P3K传动能力表：（i=560～4000）　　P3K transmission capacity table:（i=560～4000）

n_1 (r/min)	n_{2N} (r/min)	i_N	P3-20			P3-21			P3-22			P3-23			P3-24			P3-25		
			T_{2N} (kN·m)	iex	P_{1N} (kW)	T_{2N} (kN·m)	iex	P_{1N} (kW)	T_{2N} (kN·m)	iex	P_{1N} (kW)	T_{2N} (kN·m)	iex	P_{1N} (kW)	T_{2N} (kN·m)	iex	P_{1N} (kW)	T_{2N} (kN·m)	iex	P_{1N} (kW)
1500	2.68	560	354	580.56	101	392	580.56	112	450	580.56	128	513	593.88	146	592	593.88	169	684	593.88	195
1000	1.79				67			75			86			98			113			130
750	1.34				51			56			64			73			84			98
1500	2.38	630	354	656.22	90	392	656.22	99	450	656.22	114	513	667.44	130	592	667.44	150	684	667.44	174
1000	1.59				60			66			76			87			100			116
750	1.19				45			50			57			65			75			87
1500	2.11	710	354	718.27	80	392	718.27	88	450	718.27	101	513	730.55	115	592	730.55	133	684	730.55	154
1000	1.41				53			59			68			77			89			103
750	1.06				40			44			51			58			67			77
1500	1.88	800	354	797.23	71	392	797.23	78	450	797.23	90	513	810.87	102	592	810.87	118	684	810.87	137
1000	1.25				47			52			60			68			79			91
750	0.94				35			39			45			51			59			68
1500	1.67	900	354	901.13	63	392	901.13	70	450	901.13	80	513	916.54	91	592	916.54	105	684	916.54	121
1000	1.11				42			46			53			61			70			81
750	0.83				31			35			40			46			53			61
1500	1.50	1000	354	1000.4	57	392	1000.4	63	450	1000.4	72	513	1004.7	82	592	1004.7	95	684	1004.7	109
1000	1.00				38			42			48			55			63			73
750	0.75				28			31			36			41			47			55
1500	1.34	1120	354	1149.5	51	392	1149.5	56	450	1149.5	64	513	1169.1	73	592	1169.1	84	684	1169.1	98
1000	0.89				34			37			43			49			56			65
750	0.67				25			28			32			37			42			49
1500	1.20	1250	354	1270.5	45	392	1270.5	50	450	1270.5	58	513	1292.2	66	592	1292.2	76	684	1992.2	87
1000	0.80				30			33			38			44			50			58
750	0.60				23			25			29			33			38			44
1500	1.07	1400	354	1378.2	40	392	1378.2	45	450	1378.2	51	513	1401.8	59	592	1401.8	68	684	1401.8	78
1000	0.71				27			30			34			39			45			52
750	0.54				20			22			26			29			34			39
1500	0.94	1600	354	1587	35	392	1587	39	450	1587	45	513	1614.2	51	592	1614.2	59	684	1614.2	68
1000	0.63				24			26			30			34			39			46
750	0.47				18			20			22			26			30			34
1500	0.83	1800	354	1802.3	31	392	1802.3	35	450	1802.3	40	513	1850.4	46	592	1850.4	53	684	1850.4	61
1000	0.56				21			23			27			30			35			40
750	0.42				16			17			20			23			26			30
1500	0.75	2000	354	1966.1	28	392	1966.1	31	450	1966.1	36	513	1999.7	41	592	1999.7	47	684	1999.7	55
1000	0.50				19			21			24			27			32			36
750	0.38				14			16			18			20			24			27
1500	0.67	2240	354	2239.2	25	392	2239.2	28	450	2239.2	32	513	2277.5	37	592	2277.5	42	684	2277.5	49
1000	0.45				17			19			21			24			28			33
750	0.33				12.6			14			16			18			21			24
1500	0.60	2500	354	2517.2	23	392	2517.2	25	450	2517.2	29	513	2560.2	33	592	2560.2	38	684	2560.2	44
1000	0.40				15.1			17			19			22			25			29
750	0.30				11.3			13			14			16			19			22
1500	0.54	2800	354	2775.4	20	392	2775.4	22	450	2775.4	26	513	2822.8	29	592	2822.8	34	684	2822.8	39
1000	0.36				13.5			15			17			20			23			26
750	0.27				10.1			11.2			13			15			17			20
1500	0.48	3150	354	3162.6	18	392	3162.6	20	450	3162.6	23	513	3216.7	26	592	3216.7	30	684	3216.7	35
1000	0.32				12			13.3			15			17			20			23
750	0.24				9			9.9			11			13			15			17
1500	0.42	3550	354	3664	16	392	3664	18	450	3664	20	513	3726.7	23	592	3726.7	27	684	3726.7	31
1000	0.28				10.6			11.8			14			15			18			21
750	0.21				8			8.8			10			12			13			15
1500	0.38	4000	354	4244.9	14	392	4244.9	16	450	4244.9	18	513	4282.4	20	592	4282.4	24	684	4282.4	27
1000	0.25				9.4			10.4			12			14			16			18
750	0.19				7.1			7.8			9			10			12			14

P3K



P3-26			P3-27			P3-28			P3-29			P3-30			P3-31~P3-34			i_N	n_{2N} (r/min)	n_1 (r/min)
T_{2N} (kN·m)	iex	P_{1N} (kW)	T_{2N} (kN·m)	iex	P_{1N} (kW)	T_{2N} (kN·m)	iex	P_{1N} (kW)	T_{2N} (kN·m)	iex	P_{1N} (kW)	T_{2N} (kN·m)	iex	P_{1N} (kW)	T_{2N} (kN·m)	iex	P_{1N} (kW)			
		218			243			271			303			342					2.68	1500
763	593.88	145	852	580.56	162	950	580.56	181	1060	580.56	202	1200	580.56	228				560	1.79	1000
		109			122			136			151			171					1.34	750
		194			216			241			269			304					2.38	1500
763	667.44	129	852	656.22	144	950	656.22	161	1060	656.22	179	1200	656.22	203				630	1.59	1000
		97			108			121			134			152					1.19	750
		172			192			214			239			270					2.11	1500
763	730.55	115	852	718.27	128	950	718.27	143	1060	718.27	159	1200	718.27	180				710	1.41	1000
		86			96			107			119			135					1.06	750
		152			170			190			212			240					1.88	1500
763	810.87	102	852	797.23	113	950	797.23	127	1060	797.23	141	1200	797.23	160				800	1.25	1000
		76			85			95			106			120					0.94	750
		136			151			169			188			213					1.67	1500
763	916.54	90	852	901.13	101	950	901.13	112	1060	901.13	125	1200	901.13	142				900	1.11	1000
		68			76			84			94			107					0.83	750
		122			136			152			169			192					1.50	1500
763	1004.7	81	852	987.8	91	950	987.8	101	1060	987.8	113	1200	987.8	128				1000	1.00	1000
		61			68			76			85			95					0.75	750
		109			122			136			151			171					1.34	1500
763	1169.1	73	852	1149.5	81	950	1149.5	90	1060	1149.5	101	1200	1149.5	114				1120	0.89	1000
		54			61			68			76			86					0.67	750
		98			109			121			136			153					1.20	1500
763	1992.2	65	852	1270.5	73	950	1270.5	81	1060	1270.5	90	1200	1270.5	103				1250	0.80	1000
		49			54			61			68			77					0.60	750
		87			97			108			121			137	按客户				1.07	1500
763	1401.8	58	852	1459.4	65	950	1459.4	72	1060	1459.4	81	1200	1459.4	91	要求供货			1400	0.71	1000
		44			49			54			61			68					0.54	750
		76			85			95			106			120					0.94	1500
763	1614.2	51	852	1587	57	950	1587	63	1060	1587	71	1200	1587	80	On request.			1600	0.63	1000
		38			43			47			53			60					0.47	750
		68			76			84			94			107					0.83	1500
763	1850.4	45	852	1819.3	50	950	1819.3	56	1060	1819.3	63	1200	1819.3	71				1800	0.56	1000
		34			38			42			47			53					0.42	750
		61			68			76			85			96					0.75	1500
763	1999.7	41	852	1966.1	45	950	1966.1	51	1060	1966.1	56	1200	1966.1	64				2000	0.50	1000
		30			34			38			42			48					0.38	750
		54			61			68			76			86					0.67	1500
763	2277.5	36	852	2239.2	41	950	2239.2	45	1060	2239.2	50	1200	2239.2	57				2240	0.45	1000
		27			30			34			38			43					0.33	750
		49			54			61			68			77					0.60	1500
763	2560.2	33	852	2517.2	36	950	2517.2	40	1060	2517.2	45	1200	2517.2	51				2500	0.40	1000
		24			27			30			34			38					0.30	750
		44			49			54			61			68					0.54	1500
763	2822.8	29	852	2775.4	32	950	2775.4	36	1060	2775.4	40	1200	2775.4	46				2800	0.36	1000
		22			24			27			30			34					0.27	750
		39			43			48			54			61					0.48	1500
763	3216.7	26	852	3162.6	29	950	3162.6	32	1060	3162.6	36	1200	3162.6	41				3150	0.32	1000
		19			22			24			27			30					0.24	750
		34			38			43			48			54					0.42	1500
763	3726.7	23	852	3664	26	950	3664	29	1060	3664	32	1200	3664	36				3550	0.28	1000
		17			19			21			24			27					0.21	750
		30			34			38			42			48					0.38	1500
763	4282.4	20	852	4244.9	23	950	4244.9	25	1060	4244.9	28	1200	4244.9	32				4000	0.25	1000
		15			17			19			21			24					0.19	750

P3K

P

P2N.热容量(卧式安装):

P2N. Thermal capacities (Horizontal mounting position):

机座号 Type / 风速 Wind velocity / PG1	9	10	11	12	13	14	16	17	18	19/20	21/22	23/24	25/26	27/28	29/30	31/32	33/34
狭小空间安装风速≥0.5m/s Small confined spaces Wind velocity ≥ 0.5 m/s	21	26	32	42	49	65	75	92	100	119	142	174	201	242	287	326	366
大厅或大车间安装 风速≥1.4m/s Large halls, workshops Wind velocity ≥ 1.4m/s	29	37	45	60	69	92	106	130	147	169	201	246	285	343	406	462	519
室外安装 风速≥3.7m/s In the open Wind velocity ≥ 3.7m/s	39	50	60	80	93	125	143	175	191	228	272	333	386	464	505	626	702

P2S.热容量(卧式安装):

P2S. Thermal capacities (Horizontal mounting position):

机座号 Type / 风速 Wind velocity / PG1	9	10	11	12	13	14	16	17	18	19/20	21/22	23/24	25/26	27/28	29/30	31/32	33/34
狭小空间安装风速≥0.5m/s Small confined spaces Wind velocity ≥ 0.5 m/s	15	20	24	32	36	49	56	69	75	89	106	130	151	182	215	245	275
大厅或大车间安装 风速≥1.4m/s Large halls, workshops Wind velocity ≥ 1.4m/s	22	28	34	45	52	69	79	97	106	127	151	185	214	257	305	347	389
室外安装 风速≥3.7m/s In the open Wind velocity ≥ 3.7m/s	29	38	45	60	70	94	107	132	143	171	204	250	289	348	412	469	527

P3N.热容量(卧式安装):

P3N. Thermal capacities (Horizontal mounting position):

机座号 Type / 风速 Wind velocity / PG1	9	10	11	12	13	14	16	17	18	19/20	21/22	23/24	25/26	27/28	29/30	31/32	33/34
狭小空间安装风速≥0.5m/s Small confined spaces Wind velocity ≥ 0.5 m/s	14	18	22	29	34	46	52	64	70	83	99	121	141	169	200	228	256
大厅或大车间安装 风速≥1.4m/s Large halls, workshops Wind velocity ≥ 1.4m/s	20	26	31	41	48	64	74	91	99	118	140	172	199	240	284	323	362
室外安装 风速≥3.7m/s In the open Wind velocity ≥ 3.7m/s	28	35	42	56	65	87	100	123	133	159	190	233	269	324	384	437	490

P3S.热容量(卧式安装):

P3S. Thermal capacities (Horizontal mounting position):

机座号 Type / 风速 Wind velocity / PG1	9	10	11	12	13	14	16	17	18	19/20	21/22	23/24	25/26	27/28	29/30	31/32	33/34
狭小空间安装风速≥0.5m/s Small confined spaces Wind velocity ≥ 0.5 m/s	12	15	18	24	28	40	43	53	57	69	82	100	116	139	165	188	211
大厅或大车间安装 风速≥1.4m/s Large halls, workshops Wind velocity ≥ 1.4m/s	17	21	26	34	40	53	61	75	81	97	116	142	164	197	234	266	298
室外安装 风速≥3.7m/s In the open Wind velocity ≥ 3.7m/s	23	29	35	46	54	72	82	101	110	131	156	192	222	267	316	360	404

注：以上表格数据均为卧式热容量，其它安装形式请来电咨询。

Note: Values apply to horizontal mounting position. For other mounting positions please refer to us.



P2L.热容量(卧式安装):

P2L. Thermal capacities (Horizontal mounting position):

机座号 Type / 风速 Wind velocity / PG1	9	10	11	12	13	14	16	17	18	19/20	21/22	23/24	25/26	27/28	29/30	31~34
狭小空间安装风速≥0.5m/s Small confined spaces Wind velocity ≥ 0.5 m/s	14	18	22	29	34	46	52	64	70	83	99	121	141	169	200	按客户要求供货 On request.
大厅或大车间安装 风速≥1.4m/s Large halls, workshops Wind velocity ≥ 1.4m/s	20	26	31	41	48	64	74	91	99	118	140	172	199	240	284	
室外安装 风速≥3.7m/s In the open Wind velocity ≥ 3.7m/s	28	35	42	56	65	87	100	123	133	159	190	233	269	324	384	

P2K.热容量(卧式安装):

P2K. Thermal capacities (Horizontal mounting position):

机座号 Type / 风速 Wind velocity / PG1	9	10	11	12	13	14	16	17	18	19/20
狭小空间安装风速≥0.5m/s Small confined spaces Wind velocity ≥ 0.5 m/s	12	15	18	24	28	38	44	53	58	69
大厅或大车间安装 风速≥1.4m/s Large halls, workshops Wind velocity ≥ 1.4m/s	17	22	26	35	40	54	62	76	82	98
室外安装 风速≥3.7m/s In the open Wind velocity ≥ 3.7m/s	23	29	35	47	54	73	83	102	111	133

P3K.热容量(卧式安装):

P3K. Thermal capacities (Horizontal mounting position):

机座号 Type / 风速 Wind velocity / PG1	9	10	11	12	13	14	16	17	18	19/20	21/22	23/24	25/26	27/28	29/30	31~34
狭小空间安装风速≥0.5m/s Small confined spaces Wind velocity ≥ 0.5 m/s	10	12	15	20	23	31	35	43	47	56	67	82	95	109	125	按客户要求供货 On request.
大厅或大车间安装 风速≥1.4m/s Large halls, workshops Wind velocity ≥ 1.4m/s	14	17	21	28	33	44	50	61	66	79	95	116	106	125	144	
室外安装 风速≥3.7m/s In the open Wind velocity ≥ 3.7m/s	19	24	28	38	44	59	67	83	90	107	128	157	166	195	225	

注：以上表格数据均为卧式热容量，其它安装形式请来电咨询。

Note: Values apply to horizontal mounting position. For other mounting positions please refer to us.

P2NA　　iN = 25 ... 40

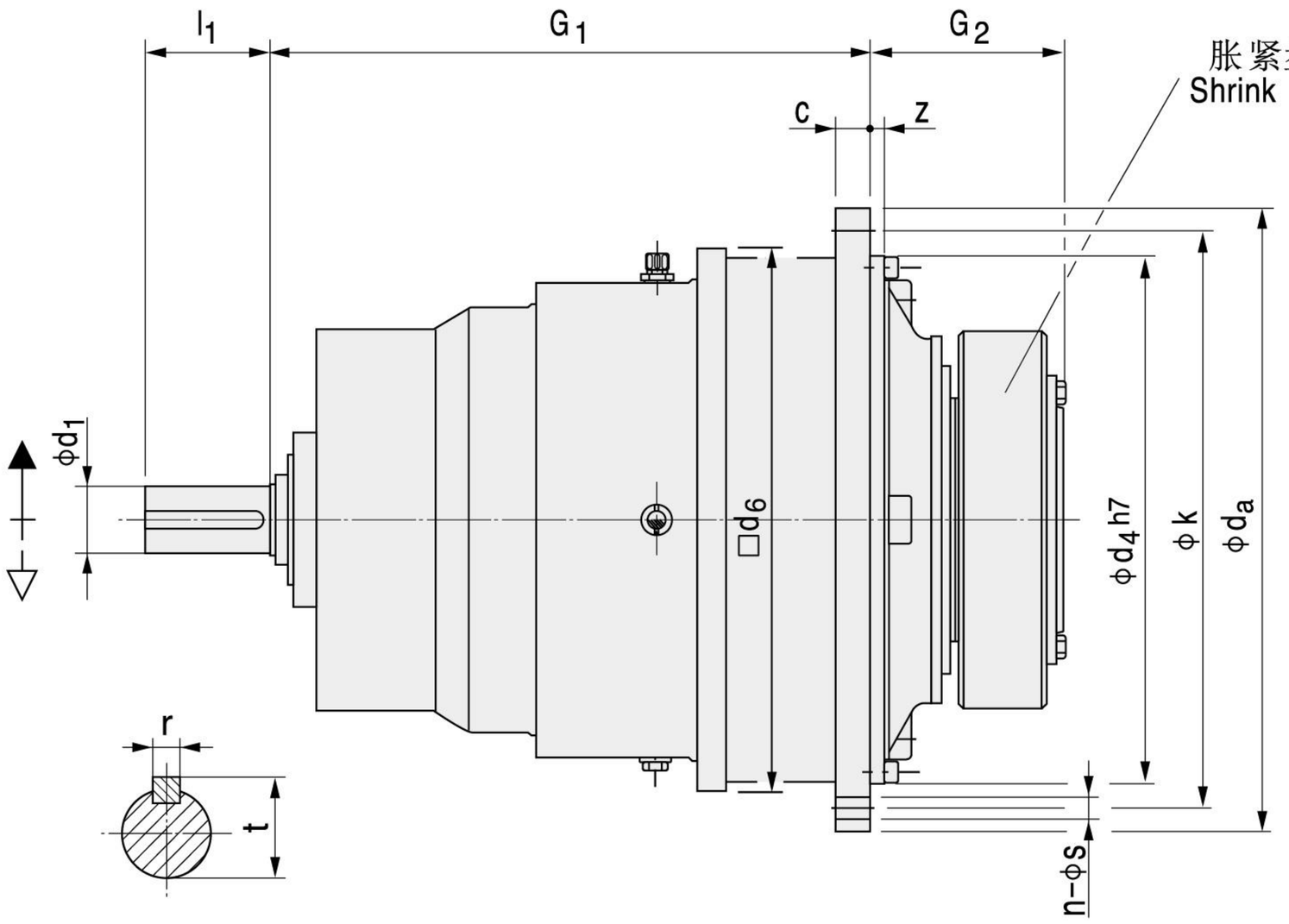

工作机连接轴
Shaft end of driven machine

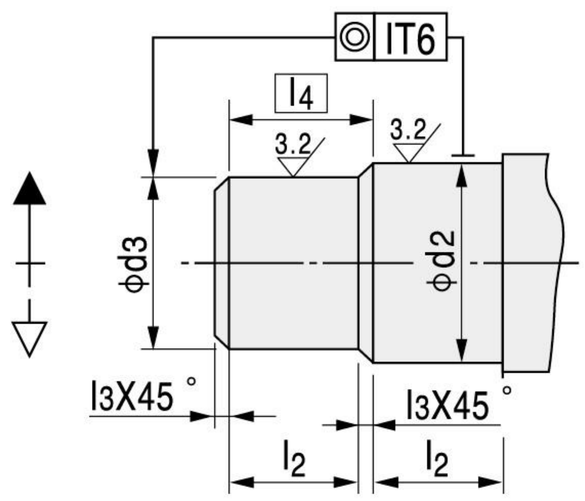

P2NA 机座号 Type	额定输出扭矩 Nominal output touque T2N (N·m)	输入轴尺寸 Shaft end input side				d_2	d_3	l_2	l_3	l_4	c	d_a	d_4	d_6	G_1	G_2	k	z	法兰孔尺寸 Flange bolts		重量 Weight (kg)	油量 Oil quantity (l)
		d_1	l_1	r	t														s	n		
9	22 000	55	90	16	59	120	115	65	2.5	67.5	24	428	350	356	469	165	388	$6^{\pm 1.5}$	18	24	240	6
10	31 000	55	90	16	59	130	125	70	2.5	72.5	28	472	394	400	489	174	436	$8^{\pm 1.5}$	18	28	290	8
11	42 000	70	120	20	74.5	140	135	82.5	2.5	85.0	32	525	425	436	579	204	485	$8^{\pm 1.5}$	22	20	350	12
12	60 000	70	120	20	74.5	160	155	90	2.5	92.5	34	605	495	510	593	224	555	$9^{\pm 1.5}$	26	20	490	16
13	83 000	80	140	25	85	180	175	95	2.5	97.5	39	645	535	554	714	241	595	$11^{\pm 1.5}$	26	24	590	20
14	117 000	80	140	25	85	210	205	105	2.5	107.5	42	720	610	629	737	278	665	9	26	32	820	32
16	160 000	95	160	25	100	230	225	110	2.5	112.5	44	770	660	680	851	285	715	10	26	36	1 030	40
17	202 000	95	160	25	100	250	245	120	2.5	122.5	50	895	750	775	877	294	830	10	33	24	1 500	56
18	244 000	110	180	28	116	260	255	120	2.5	122.5	50	930	785	815	1006	303	865	10	33	32	1 900	66
19	295 000	110	180	28	116	280	275	135	2.5	137.5	56	980	840	870	1029.5	327.5	915	12	33	36	2 000	82
20	354 000	110	180	28	116	300	295	135	2.5	137.5	56	980	840	870	1029.5	327.5	915	12	33	36	2 100	75
21	392 000	120	210	32	127	310	305	152	2.5	154.5	62	1115	935	960	1046	354	1025	24	39	32	2 650	110
22	450 000	120	210	32	127	330	325	152	2.5	154.5	62	1115	935	960	1046	354	1025	24	39	32	2 800	95
23	513 000	130	210	32	137	350	345	164	2.5	166.5	68	1210	1025	1056	1150	380	1120	28	39	36	3 450	150
24	592 000	130	210	32	137	360	355	164	2.5	166.5	68	1210	1025	1056	1150	380	1120	28	39	36	3 900	125
25	684 000	140	240	36	148	380	375	180	2.5	182.5	74	1320	1115	1150	1241	407	1220	29	45	36	4 750	190
26	763 000	140	240	36	148	400	395	180	2.5	182.5	74	1320	1115	1150	1241	407	1220	29	45	36	5 150	160
27	852 000	150	240	36	158	430	425	191	2.5	193.5	81	1460	1215	1248	1379	453	1345	31	52	32	6 100	245
28	950 000	150	240	36	158	450	445	191	2.5	193.5	81	1460	1215	1248	1379	453	1345	31	52	32	6 550	205
29	1 060 000	160	270	40	169	460	450	197.5	5	202.5	87	1565	1320	1355	1457	483	1450	34	52	36	7 800	305
30	1 200 000	160	270	40	169	480	470	197.5	5	202.5	87	1565	1320	1355	1457	483	1450	34	52	36	8 300	255
31	1 330 000	170	270	40	179	480	470	232	5	237.0	94	1665	1400	1443	1607	538	1545	36	62	32	10 200	380
32	1 500 000	170	270	40	179	510	500	232	5	237.0	94	1665	1400	1443	1607	538	1545	36	62	32	10 700	315
33	1 680 000	180	310	40	179	530	520	242	5	247.0	100	1755	1495	1536	1683	573	1635	36	62	36	12 350	460
34	1 920 000	180	310	45	190	570	560	242	5	247.0	100	1755	1495	1536	1683	573	1635	36	62	36	13 150	380

注：1　当d1≤100时公差为m6,当d1>100时公差为n6;
2　当尺寸d2或d3≤160时，公差为h6;
当尺寸d2或d3>160时，公差为g6;
3　重量不包括胀紧盘和润滑油。

Note: 1 When shaft diameter d1≤100, tolerance is m6,
When shaft diameter d1 >100, tolerance is n6;
2 When shaft diameter d2 or d3 ≤160, tolerance h6;
When shaft diameter d2 or d3 >160, tolerance g6;
3 Weight without shrink disk and oil.

P2LA　　i_N = 31.5 ...100

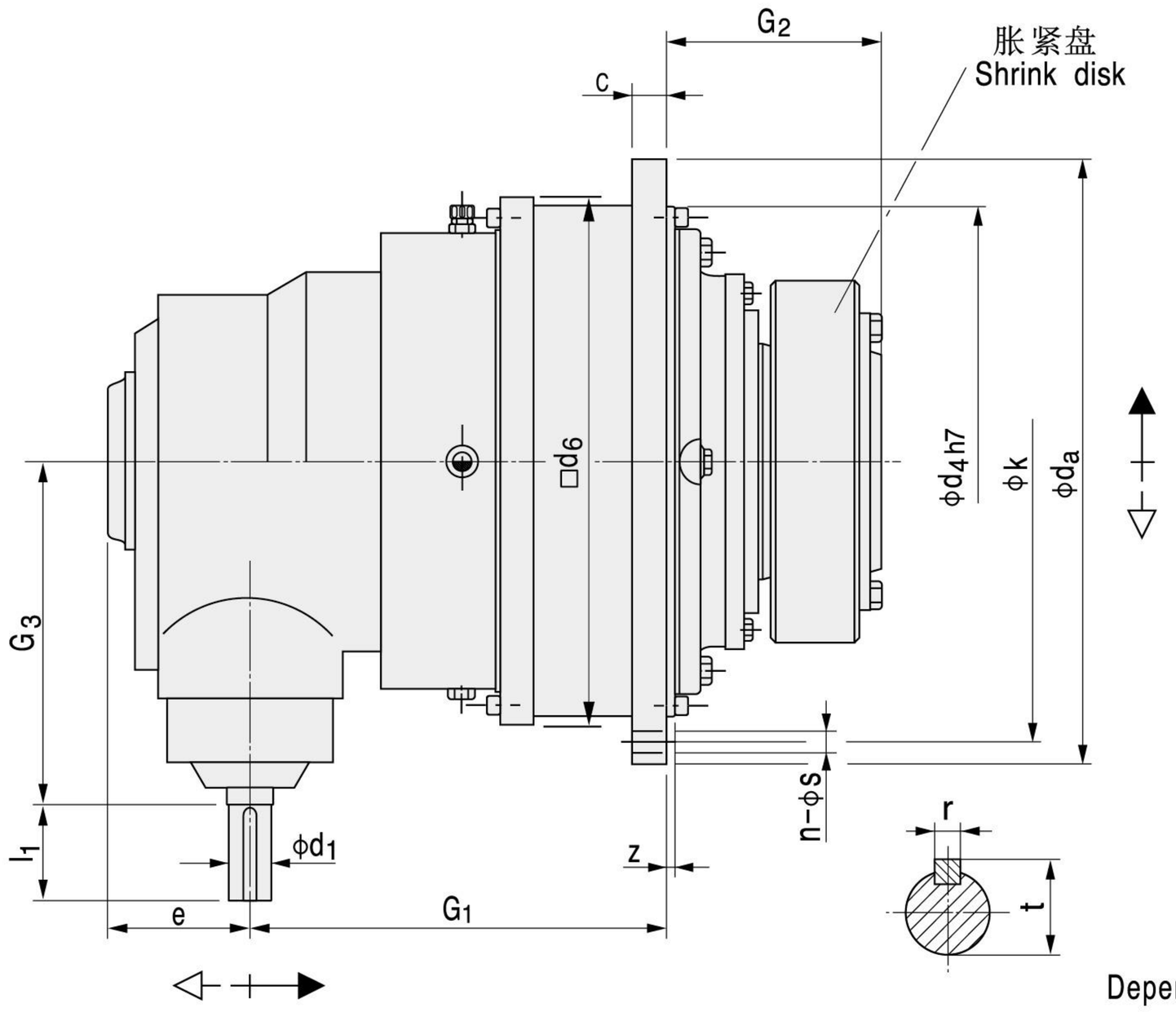

工作机连接轴
Shaft end of driven machine

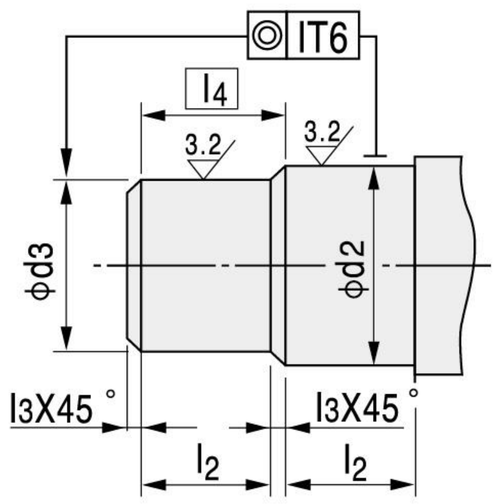

Dependency of direction of rotation on request

P

P2LA 机座号 Type	额定输出扭矩 Nominal output touque T2N (N·m)	输入轴尺寸 Shaft end input side								d_2	d_3	l_2	l_3	l_4	c	d_a	d_4	d_6	e	G_1	G_2	G_3	k	z	法兰孔尺寸 Flange bolts		重量 Weight (kg)	油量 Oil quantity (l)
		$i_N \leqslant 90$				$i_N \geqslant 100$																			s	n		
		d_1	l_1	r	t	d_1	l_1	r	t																			
9	22 000	50	100	14	53.5	40	80	12	43	120	115	65	2.5	67.5	24	428	350	356	185	425	165	305	388	6±1.5	18	24	260	6
10	31 000	50	100	14	53.5	40	80	12	43	130	125	70	2.5	72.5	28	472	394	400	185	445	174	305	436	8±1.5	18	28	310	8
11	42 000	60	110	18	64	50	100	14	53.5	140	135	82.5	2.5	85.0	32	525	425	436	210	501	204	350	485	8±1.5	22	20	380	12
12	60 000	60	110	18	64	50	100	14	53.5	160	155	90	2.5	92.5	34	605	495	510	210	515	224	350	555	9±1.5	26	20	520	16
13	83 000	75	135	20	79.5	60	110	18	64	180	175	95	2.5	97.5	39	645	535	554	250	619	241	415	595	11±1.5	26	24	650	20
14	117 000	75	135	20	79.5	60	110	18	64	210	205	105	2.5	107.5	42	720	610	629	250	642	278	415	665	9	26	32	910	32
16	160 000	85	165	22	90	70	140	20	74.5	230	225	110	2.5	112.5	44	770	660	680	295	705	285	490	715	10	26	36	1 137	40
17	202 000	85	165	22	90	70	140	20	74.5	250	245	120	2.5	122.5	50	895	750	775	295	731	294	490	830	10	33	24	1 660	56
18	244 000	95	165	25	100	75	140	20	79.5	260	255	120	2.5	122.5	50	930	785	815	350	882	303	605	865	10	33	32	2 100	66
19	295 000	95	165	25	100	75	140	20	79.5	280	275	135	2.5	137.5	56	980	840	870	350	905.5	327.5	605	915	12	33	36	2 200	82
20	354 000	95	165	25	100	75	140	20	79.5	300	295	135	2.5	137.5	56	980	840	870	350	905.5	327.5	605	915	12	33	36	2 300	75
21	392 000	115	205	32	122	90	170	25	95	310	305	152	2.5	154.5	62	1115	935	960	400	996	354	700	1025	24	39	32	2 930	110
22	450 000	115	205	32	122	90	170	25	95	330	325	152	2.5	154.5	62	1115	935	960	400	996	354	700	1025	24	39	32	3 100	95
23	513 000	115	205	32	122	90	170	25	95	350	345	164	2.5	166.5	68	1210	1025	1056	400	1055	380	700	1120	28	39	36	3 800	150
24	592 000	115	205	32	122	90	170	25	95	360	355	164	2.5	166.5	68	1210	1025	1056	400	1055	380	700	1120	28	39	36	4 300	125
25	684 000	140	245	36	148	110	210	28	116	380	375	180	2.5	182.5	74	1320	1115	1150	475	1138	407	835	1220	29	45	36	5 250	190
26	763 000	140	245	36	148	110	210	28	116	400	395	180	2.5	182.5	74	1320	1115	1150	475	1138	407	835	1220	29	45	36	5 660	160
27	852 000	140	245	36	148	110	210	28	116	430	425	191	2.5	193.5	81	1460	1215	1248	475	1272	453	835	1345	31	52	32	6 680	245
28	950 000	140	245	36	148	110	210	28	116	450	445	191	2.5	193.5	81	1460	1215	1248	475	1272	453	835	1345	31	52	32	7 180	205
29	1 060 000	150	245	40	169	115	210	32	122	460	450	197.5	5	202.5	87	1565	1320	1355	530	1367	483	945	1450	34	52	36	8 500	305
30	1 200 000	150	245	40	169	115	210	32	122	480	470	197.5	5	202.5	87	1565	1320	1355	530	1367	483	945	1450	34	52	36	9 070	255
31 – 34	On request 按客户要求供货																											

注：1　当d1≤100时公差为m6,当d1>100时公差为n6;
　　2　当尺寸d2或d3≤160时，公差为h6;
　　当尺寸d2或d3>160时，公差为g6;
　　3　重量不包括胀紧盘和润滑油。

Note: 1 When shaft diameter d1 ≤ 100, tolerance is m6,
When shaft diameter d1 >100, tolerance is n6;
2 When shaft diameter d2 or d3 ≤160, tolerance h6;
When shaft diameter d2 or d3 >160, tolerance g6;
3 Weight without shrink disk and oil.

P2SA i_N = 45 ... 125

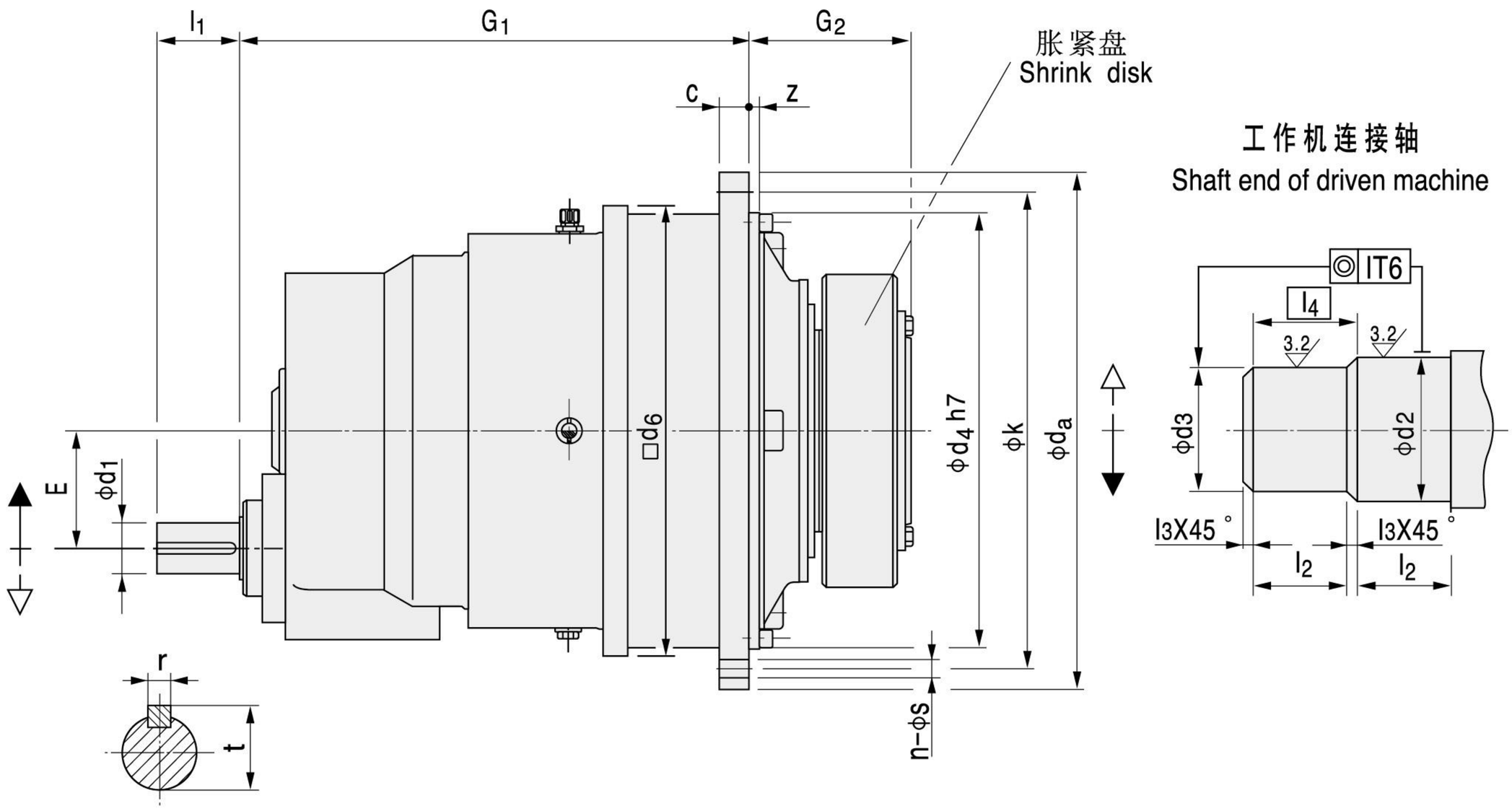

P2SA 机座号 Type	额定输出扭矩 Nominal output touque T_{2N} (N·m)	输入轴尺寸 Shaft end input side				d_2	d_3	l_2	l_3	l_4	c	d_a	d_4	d_6	E	G_1	G_2	k	z	法兰孔尺寸 Flange bolts		重量 Weight (kg)	油量 Oil quantity (l)
		d_1	l_1	r	t															s	n		
9	22 000	38	60	10	41	120	115	65	2.5	67.5	24	428	350	356	90	469	165	388	$6^{\pm 1.5}$	18	24	260	6
10	31 000	38	60	10	41	130	125	70	2.5	72.5	28	472	394	400	90	489	174	436	$8^{\pm 1.5}$	18	28	310	8
11	42 000	55	90	16	59	140	135	82.5	2.5	85.0	32	525	425	436	115	579	204	485	$8^{\pm 1.5}$	22	20	380	12
12	60 000	55	90	16	59	160	155	90	2.5	92.5	34	605	495	510	115	593	224	555	$9^{\pm 1.5}$	26	20	520	16
13	83 000	70	120	20	74.5	180	175	95	2.5	97.5	39	645	535	554	140	714	241	595	$11^{\pm 1.5}$	26	24	660	20
14	117 000	70	120	20	74.5	210	205	105	2.5	107.5	42	720	610	629	140	737	278	665	9	26	32	920	32
16	160 000	80	140	25	85	230	225	110	2.5	112.5	44	770	660	680	170	851	285	715	10	26	36	1 150	40
17	202 000	80	140	25	85	250	245	120	2.5	122.5	50	895	750	775	170	877	294	830	10	33	24	1 650	56
18	244 000	90	160	25	95	260	255	120	2.5	122.5	50	930	785	815	200	1006	303	865	10	33	32	1 950	66
19	295 000	90	160	25	95	280	275	135	2.5	137.5	56	980	840	870	200	1029.5	327.5	915	12	33	36	2400	82
20	354 000	90	160	25	95	300	295	135	2.5	137.5	56	980	840	870	200	1029.5	327.5	915	12	33	36	2 500	75
21	392 000	100	180	28	106	310	305	152	2.5	154.5	62	1115	935	960	230	1076	354	1025	24	39	32	2 900	110
22	450 000	100	180	28	106	330	325	152	2.5	154.5	62	1115	935	960	230	1076	354	1025	24	39	32	3 100	95
23	513 000	120	210	32	127	350	345	164	2.5	166.5	68	1210	1025	1056	265	1175	380	1120	28	39	36	3 800	150
24	592 000	120	210	32	127	360	355	164	2.5	166.5	68	1210	1025	1056	265	1175	380	1120	28	39	36	4 100	125
25	684 000	130	210	32	137	380	375	180	2.5	182.5	74	1320	1115	1150	300	1291	407	1220	29	45	36	4 950	190
26	763 000	130	210	32	137	400	395	180	2.5	182.5	74	1320	1115	1150	300	1291	407	1220	29	45	36	5 350	160
27	852 000	140	240	36	148	430	425	191	2.5	193.5	81	1460	1215	1248	320	1429	453	1345	31	52	32	6 800	245
28	950 000	140	240	36	148	450	445	191	2.5	193.5	81	1460	1215	1248	320	1429	453	1345	31	52	32	7 200	205
29	1 060 000	150	240	36	158	460	450	197.5	5	202.5	87	1565	1320	1355	360	1507	483	1450	34	52	36	8 500	305
30	1 200 000	150	240	36	158	480	470	197.5	5	202.5	87	1565	1320	1355	360	1507	483	1450	34	52	36	9 000	255
31	1 330 000	160	270	40	169	480	470	232	5	237.0	94	1665	1400	1443	400	1662	538	1545	36	62	32	10 500	380
32	1 500 000	160	270	40	169	510	500	232	5	237.0	94	1665	1400	1443	400	1662	538	1545	36	62	32	11 200	315
33	1 680 000	170	270	40	179	530	520	242	5	247.0	100	1755	1495	1536	400	1743	573	1635	36	62	36	12 700	460
34	1 920 000	170	270	40	179	570	560	242	5	247.0	100	1755	1495	1536	400	1743	573	1635	36	62	36	13 500	380

注：1 当d1≤100时公差为m6,当d1>100时公差为n6;
2 当尺寸d2或d3≤160时，公差为h6;
当尺寸d2或d3>160时，公差为g6;
3 重量不包括胀紧盘和润滑油。

Note: 1 When shaft diameter d1≤100, tolerance is m6,
When shaft diameter d1 >100, tolerance is n6;
2 When shaft diameter d2 or d3 ≤160, tolerance h6;
When shaft diameter d2 or d3 >160, tolerance g6;
3 Weight without shrink disk and oil.

P2KA　　i_N = 112 ...500

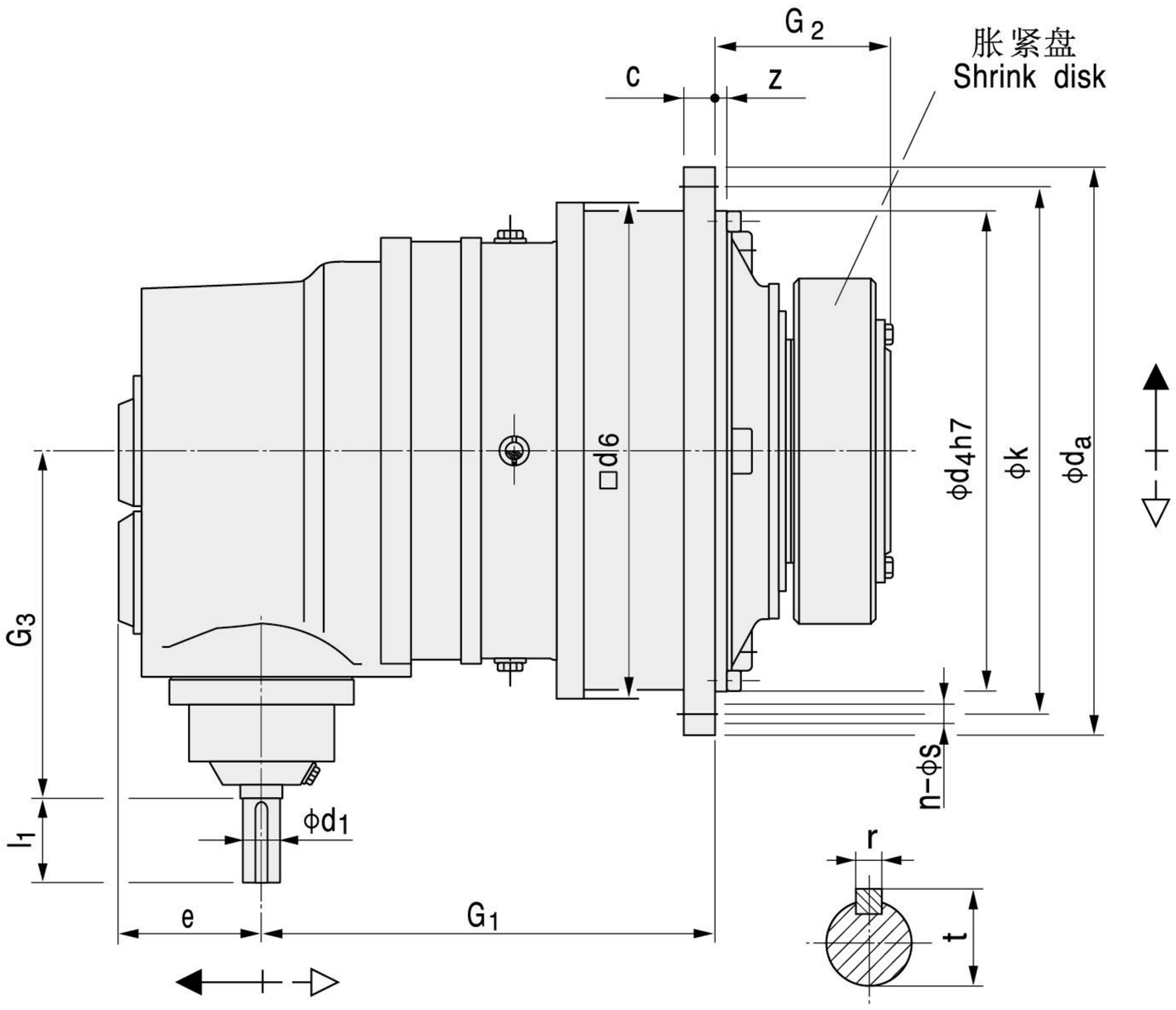

工作机连接轴
Shaft end of driven machine

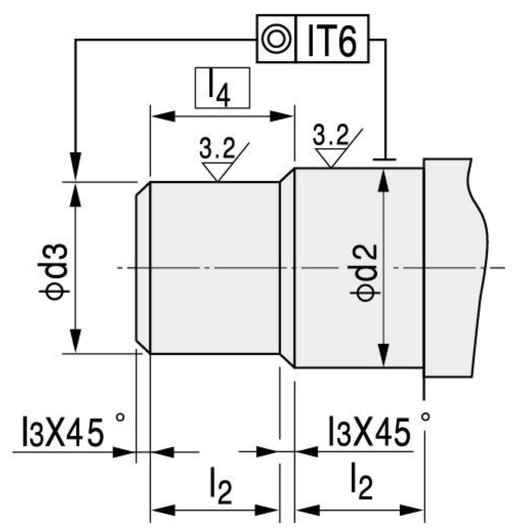

P

P2KA 机座号 Type	额定输出扭矩 Nominal output touque T2N (N·m)	输入轴尺寸 Shaft end input side								d2	d3	l2	l3	l4	c	da	d4	d6	e	G1	G2	G3	k	z	法兰孔尺寸 Flange bolts		重量 Weight (kg)	油量 Oil quantity (l)
		iN≤360				iN≥400																			s	n		
		d1	l1	r	t	d1	l1	r	t																			
9	22 000	35	70	10	38	30	60	8	33	120	115	65	2.5	67.5	24	428	350	356	119	339	165	320	388	6±1.5	18	24	270	6
10	31 000	35	70	10	38	30	60	8	33	130	125	70	2.5	72.5	28	472	394	400	119	359	174	320	436	8±1.5	18	28	320	8
11	42 000	45	80	14	48.5	35	60	10	38	140	135	82.5	2.5	85	32	525	425	436	137	419	204	375	485	8±1.5	22	20	390	12
12	60 000	45	80	14	48.5	35	60	10	38	160	155	90	2.5	92.5	34	605	495	510	137	433	224	375	555	9±1.5	26	20	540	16
13	83 000	50	100	14	53.5	40	80	12	43	180	175	95	2.5	97.5	39	645	535	554	172	518.5	241	445	595	11±1.5	26	24	690	20
14	117 000	50	100	14	53.5	40	80	12	43	210	205	105	2.5	107.5	42	720	610	629	172	541.5	278	445	665	9	26	32	950	32
16	160 000	60	110	18	64	50	100	14	53.5	230	225	110	2.5	112.5	44	770	660	680	194	632	285	520	715	10	26	36	1 184	40
17	202 000	60	110	18	64	50	100	14	53.5	250	245	120	2.5	122.5	50	895	750	775	194	658	294	520	830	10	33	24	1 700	56
18	244 000	75	135	20	79.5	60	110	18	64	260	255	120	2.5	122.5	50	930	785	815	240	741.5	303	615	865	10	33	32	2 010	73
19	295 000	75	135	20	79.5	60	110	18	64	280	275	135	2.5	137.5	56	980	840	870	240	764.5	327.5	615	915	12	33	36	2 470	82
20	354 000	75	135	20	79.5	60	110	18	64	300	295	135	2.5	137.5	56	980	840	870	240	764.5	327.5	615	915	12	33	36	2 550	75
21 – 26	On request																											

注：1　当d1≤100时公差为m6,当d1>100时公差为n6;
　　2　当尺寸d2或d3≤160时，公差为h6;
　　当尺寸d2或d3>160时，公差为g6;
　　3　重量不包括胀紧盘和润滑油。

Note: 1 When shaft diameter d1≤100, tolerance is m6,
When shaft diameter d1 >100, tolerance is n6;
2 When shaft diameter d2 or d3 ≤160, tolerance h6;
When shaft diameter d2 or d3 >160, tolerance g6;
3 Weight without shrink disk and oil.

P3NA i_N = 140 ...280

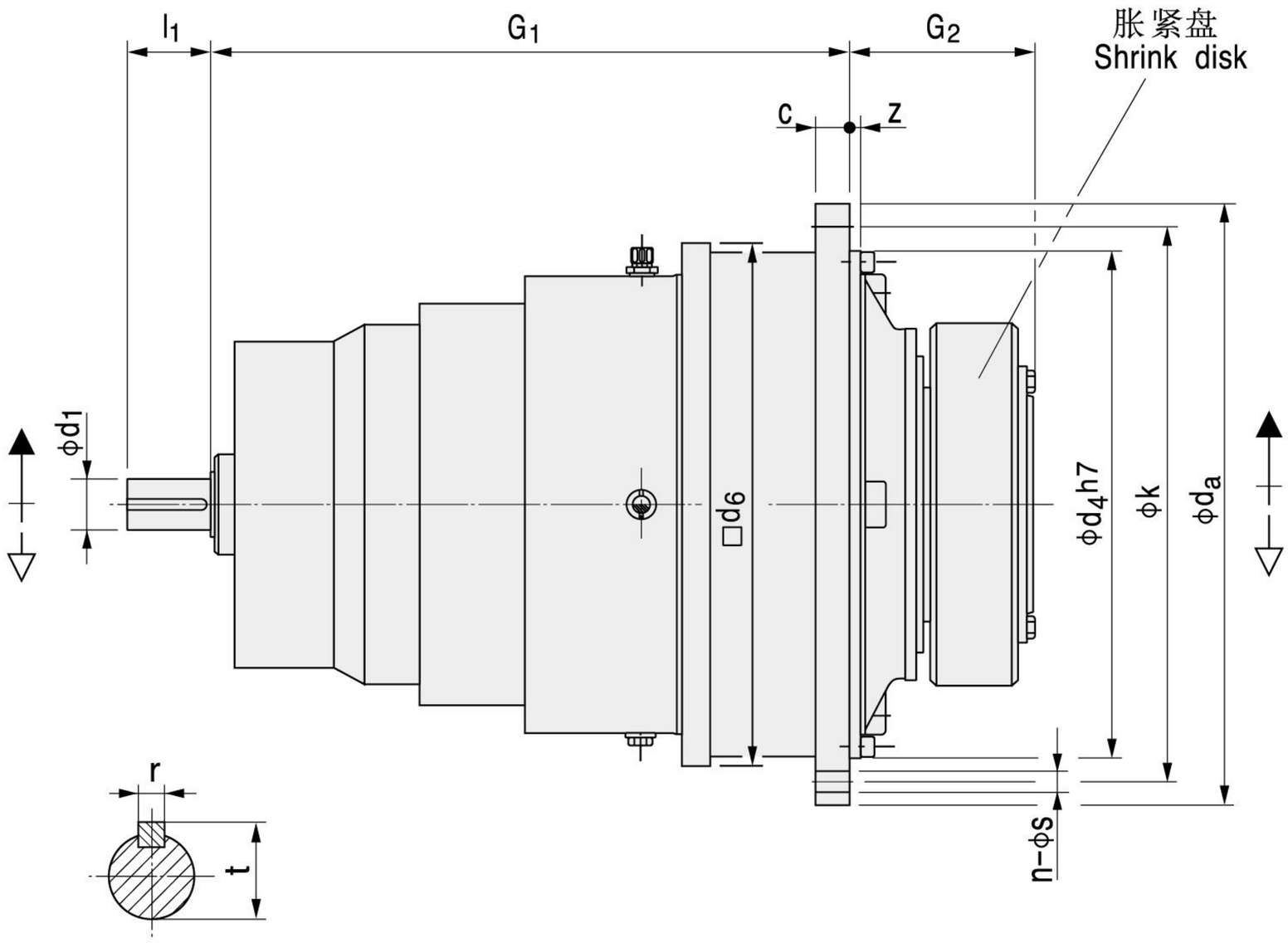

工作机连接轴
Shaft end of driven machine

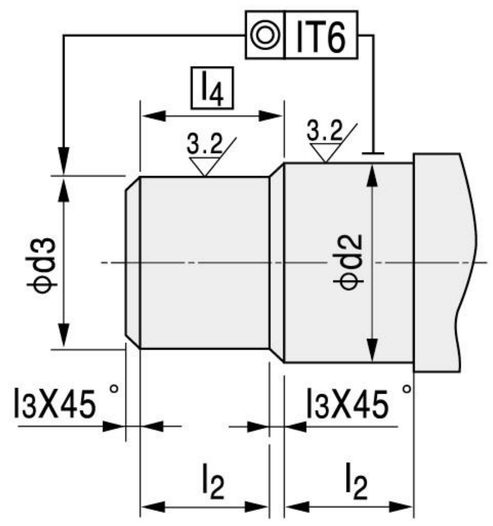

P3NA 机座号 Type	额定输出扭矩 Nominal out-put touque T_{2N} (N·m)	输入轴尺寸 Shaft end input side				d_2	d_3	l_2	l_3	l_4	c	d_a	d_4	d_6	G_1	G_2	k	z	法兰孔尺寸 Flange bolts		重量 Weight (kg)	油量 Oil quantity (l)
		d_1	l_1	r	t														s	n		
9	22 000	55	90	16	59	120	115	65	2.5	67.5	24	428	350	356	565	165	388	$6^{\pm 1.5}$	18	24	250	7
10	31 000	55	90	16	59	130	125	70	2.5	72.5	28	472	394	400	585	174	436	$6^{\pm 1.5}$	18	28	300	9
11	42 000	55	90	16	59	140	135	82.5	2.5	85.0	32	525	425	436	616	204	485	$8^{\pm 1.5}$	22	20	370	13
12	60 000	55	90	16	59	160	155	90	2.5	92.5	34	605	495	510	630	224	555	$9^{\pm 1.5}$	26	20	500	17
13	83 000	55	90	16	59	180	175	95	2.5	97.5	39	645	535	554	688	241	595	$11^{\pm 1.5}$	26	24	620	21
14	117 000	55	90	16	59	210	205	105	2.5	107.5	42	720	610	629	711	278	665	9	26	32	880	33
16	160 000	70	120	20	74.5	230	225	110	2.5	112.5	44	770	660	680	853	285	715	10	26	36	1 085	42
17	202 000	70	120	20	74.5	250	245	120	2.5	122.5	50	895	750	775	879	294	830	10	33	24	1 580	60
18	244 000	80	140	25	85	260	255	120	2.5	122.5	50	930	785	815	1013.5	303	865	10	33	32	2 000	70
19	295 000	80	140	25	85	280	275	135	2.5	137.5	56	980	840	870	1036.5	327.5	915	12	33	36	2 100	85
20	354 000	80	140	25	85	300	295	135	2.5	137.5	56	980	840	870	1036.5	327.5	915	12	33	36	2 200	75
21	392 000	80	140	25	85	310	305	152	2.5	154.5	62	1115	935	960	1093	354	1025	24	39	32	2 785	115
22	450 000	80	140	25	85	330	325	152	2.5	154.5	62	1115	935	960	1093	354	1025	24	39	32	2 950	105
23	513 000	95	160	25	100	350	345	164	2.5	166.5	68	1210	1025	1056	1222	380	1120	28	39	36	3 625	155
24	592 000	95	160	25	100	360	355	164	2.5	166.5	68	1210	1025	1056	1222	380	1120	28	39	36	4 100	135
25	684 000	95	160	25	100	380	375	180	2.5	182.5	74	1320	1115	1150	1284.5	407	1220	29	45	36	5 000	195
26	763 000	95	160	25	100	400	395	180	2.5	182.5	74	1320	1115	1150	1284.5	407	1220	29	45	36	5 400	170
27	852 000	110	180	28	116	430	425	191	2.5	193.5	81	1460	1215	1248	1470	453	1345	31	52	32	6 400	250
28	950 000	110	180	28	116	450	445	191	2.5	193.5	81	1460	1215	1248	1470	453	1345	31	52	32	6 875	220
29	1 060 000	110	180	28	116	460	450	197.5	5	202.5	87	1565	1320	1355	1517	483	1450	34	52	36	8 190	310
30	1 200 000	110	180	28	116	480	470	197.5	5	202.5	87	1565	1320	1355	1517	483	1450	34	52	36	8 715	280
31	1 330 000	120	210	32	127	480	470	232	5	237.0	94	1665	1400	1443	1585	540	1545	36	62	32	10 700	390
32	1 500 000	120	210	32	127	510	500	232	5	237.0	94	1665	1400	1443	1585	540	1545	36	62	32	11 200	360
33	1 680 000	130	210	32	137	530	520	242	5	247.0	100	1755	1495	1536	1710	573	1635	36	62	36	12 950	470
34	1 920 000	130	210	32	137	570	560	242	5	247.0	100	1755	1495	1536	1710	573	1635	36	62	36	13 800	430

注：1 当d1≤100时公差为m6,当d1>100时公差为n6;
2 当尺寸d2或d3≤160时，公差为h6;
当尺寸d2或d3>160时，公差为g6;
3 重量不包括胀紧盘和润滑油。

Note: 1 When shaft diameter d1≤100, tolerance is m6,
When shaft diameter d1 >100, tolerance is n6;
2 When shaft diameter d2 or d3 ≤160, tolerance h6;
When shaft diameter d2 or d3 >160, tolerance g6;
3 Weight without shrink disk and oil.

P3SA　　i_N = 280 ... 900

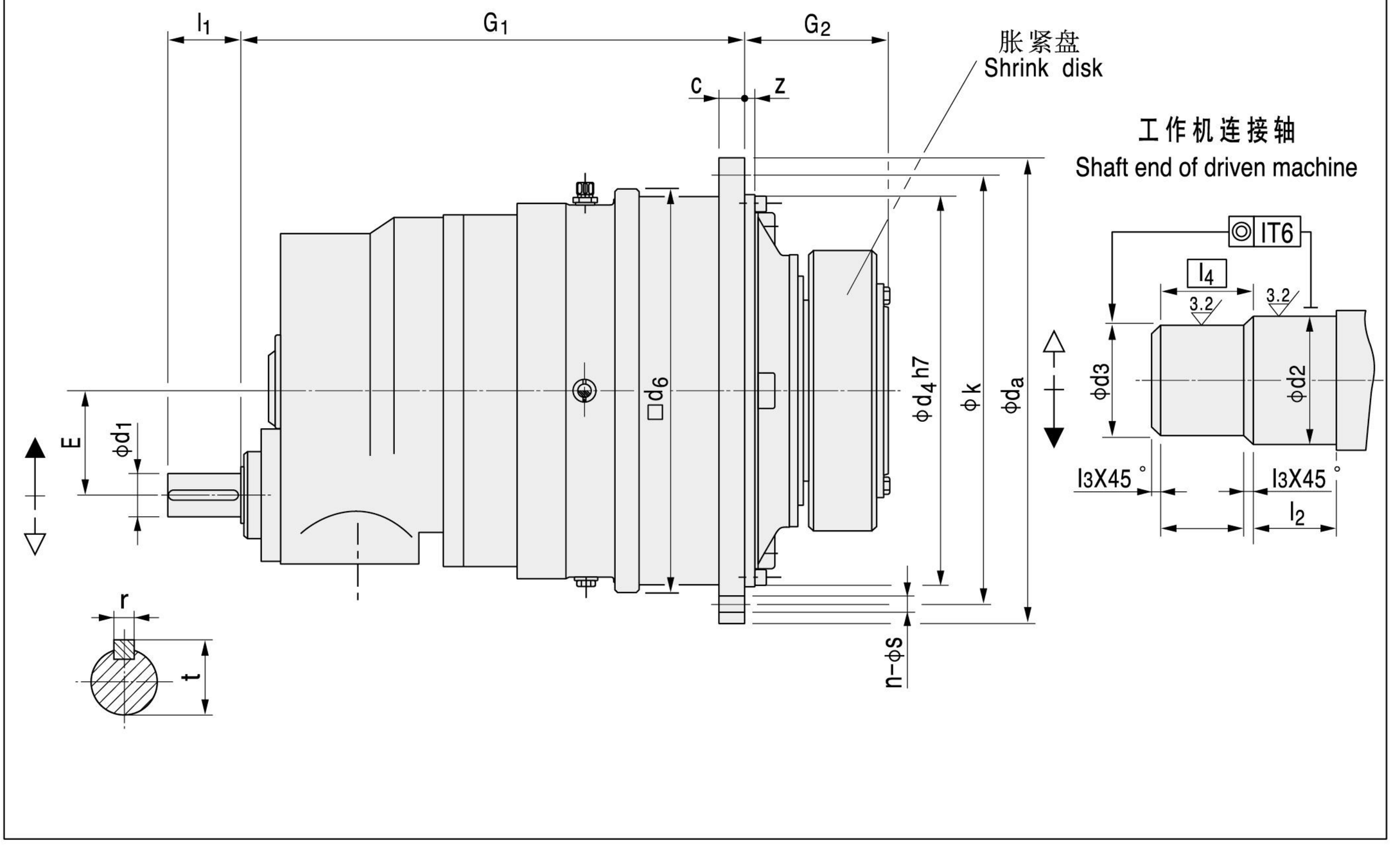

P3SA 机座号 Type	额定输出扭矩 Nominal output touque T_{2N} (N·m)	输入轴尺寸 Shaft end input side d_1	l_1	r	t	d_2	d_3	l_2	l_3	$\boxed{l_4}$	c	d_a	d_4	d_6	E	G_1	G_2	k	z	法兰孔尺寸 Flange bolts s	n	重量 Weight (kg)	油量 Oil quantity (l)
9	22 000	38	60	10	41	120	115	65	2.5	67.5	24	428	350	356	90	565	165	388	$6^{\pm 1.5}$	18	24	270	7
10	31 000	38	60	10	41	130	125	70	2.5	72.5	28	472	394	400	90	585	174	436	$8^{\pm 1.5}$	18	28	320	9
11	42 000	38	60	10	41	140	135	82.5	2.5	85.0	32	525	425	436	90	616	204	485	$8^{\pm 1.5}$	22	20	390	13
12	60 000	38	60	10	41	160	155	90	2.5	92.5	34	605	495	510	90	630	224	555	$9^{\pm 1.5}$	26	20	540	17
13	83 000	38	60	10	41	180	175	95	2.5	97.5	39	645	535	554	90	688	241	595	$11^{\pm 1.5}$	26	24	670	21
14	117 000	38	60	10	41	210	205	105	2.5	107.5	42	720	610	629	90	711	278	665	9	26	32	930	33
16	160 000	55	90	16	59	230	225	110	2.5	112.5	44	770	660	680	115	853	285	715	10	26	36	1 115	42
17	202 000	55	90	16	59	250	245	120	2.5	122.5	50	895	750	775	115	879	294	830	10	33	24	1 625	60
18	244 000	70	120	20	74.5	260	255	120	2.5	122.5	50	930	785	815	140	1013.5	303	865	10	33	32	2 060	70
19	295 000	70	120	20	74.5	280	275	135	2.5	137.5	56	980	840	870	140	1036.5	327.5	915	12	33	36	2 160	85
20	354 000	70	120	20	74.5	300	295	135	2.5	137.5	56	980	840	870	140	1036.5	327.5	915	12	33	36	2 260	75
21	392 000	70	120	20	74.5	310	305	152	2.5	154.5	62	1115	935	960	140	1093	354	1025	24	39	32	2 870	115
22	450 000	70	120	20	74.5	330	325	152	2.5	154.5	62	1115	935	960	140	1093	354	1025	24	39	32	3 040	105
23	513 000	80	140	25	85	350	345	164	2.5	166.5	68	1210	1025	1056	170	1222	380	1120	28	39	36	3 730	155
24	592 000	80	140	25	85	360	355	164	2.5	166.5	68	1210	1025	1056	170	1222	380	1120	28	39	36	4 220	135
25	684 000	80	140	25	85	380	375	180	2.5	182.5	74	1320	1115	1150	170	1284	407	1220	29	45	36	5 150	195
26	763 000	80	140	25	85	400	395	180	2.5	182.5	74	1320	1115	1150	170	1284	407	1220	29	45	36	5 560	170
27	852 000	90	160	25	95	430	425	191	2.5	193.5	81	1460	1215	1248	200	1470	453	1345	31	52	32	6 580	250
28	950 000	90	160	25	95	450	445	191	2.5	193.5	81	1460	1215	1248	200	1470	453	1345	31	52	32	7 080	220
29	1 060 000	90	160	25	95	460	450	197.5	5	202.5	87	1565	1320	1355	200	1517	483	1450	34	52	36	8 400	310
30	1 200 000	90	160	25	95	480	470	197.5	5	202.5	87	1565	1320	1355	200	1517	483	1450	34	52	36	8 970	280
31	1 330 000	100	180	28	106	480	470	232	5	237.0	94	1665	1400	1443	230	1617	538	1545	36	62	32	11 000	390
32	1 500 000	100	180	28	106	510	500	232	5	237.0	94	1665	1400	1443	230	1617	538	1545	36	62	32	11 500	360
33	1 680 000	120	210	32	127	530	520	242	5	247.0	100	1755	1495	1536	265	1735	573	1635	36	62	36	13 300	470
34	1 920 000	120	210	32	127	570	560	242	5	247.0	100	1755	1495	1536	265	1735	573	1635	36	62	36	14 200	430

注：1　当d1≤100时公差为m6,当d1>100时公差为n6;
　　2　当尺寸d2或d3≤160时，公差为h6;
　　当尺寸d2或d3>160时，公差为g6;
　　3　重量不包括胀紧盘和润滑油。

Note: 1 When shaft diameter d1≤100, tolerance is m6,
When shaft diameter d1 >100, tolerance is n6;
2 When shaft diameter d2 or d3 ≤160, tolerance h6;
When shaft diameter d2 or d3 >160, tolerance g6;
3 Weight without shrink disk and oil.

P3KA $i_N = 560 ... 4000$

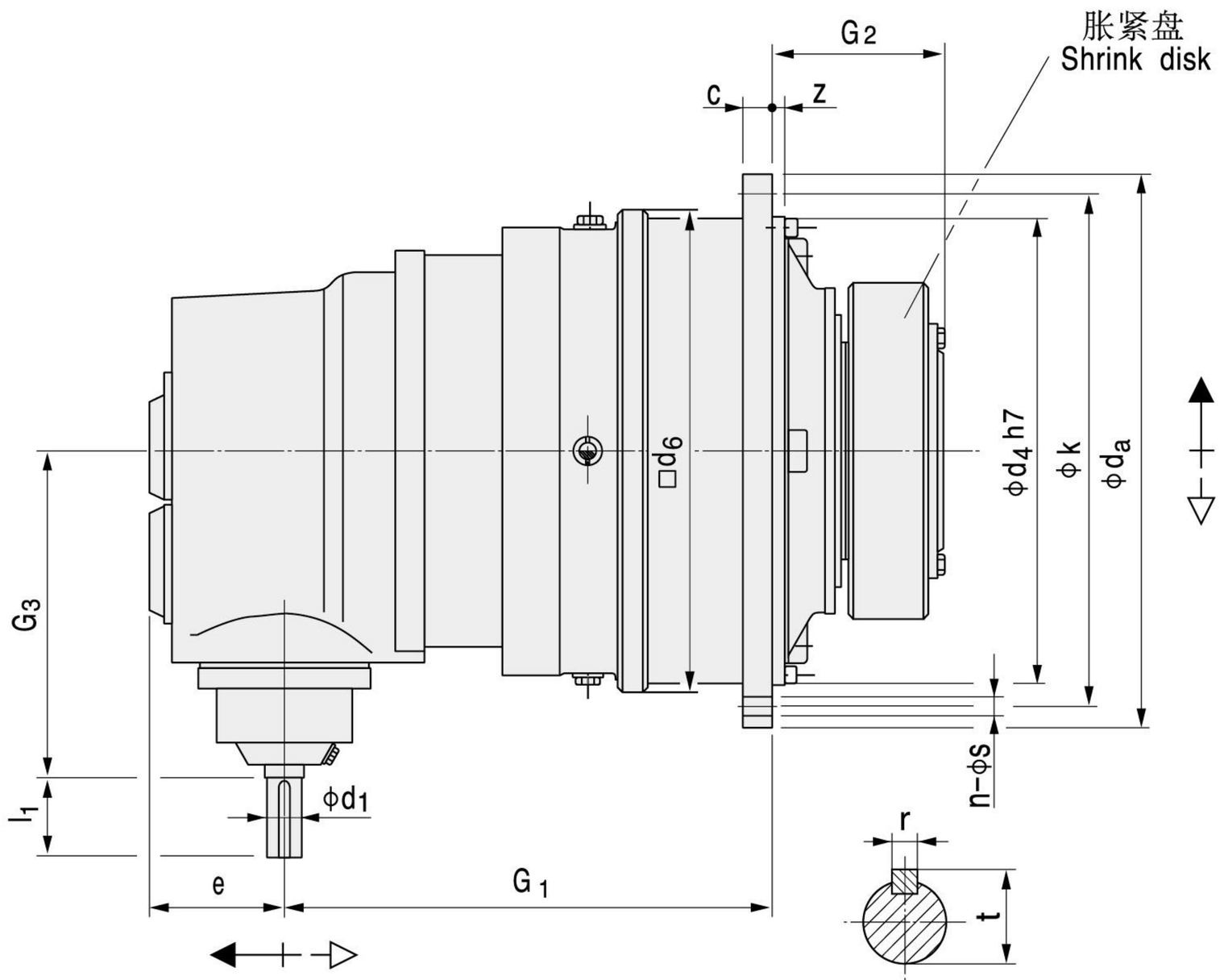

工作机连接轴
Shaft end of driven machine

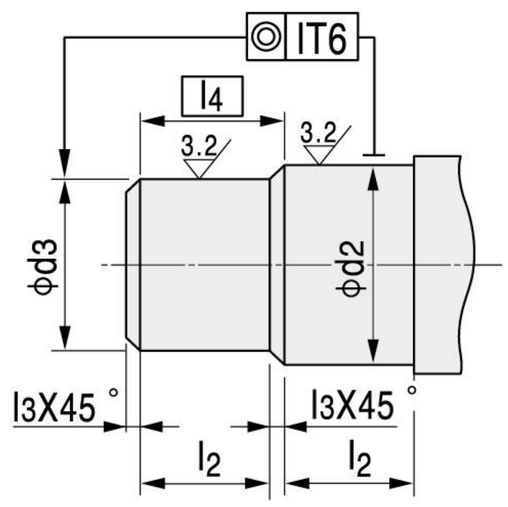

P3KA 机座号 Type	额定输出扭矩 Nominal output touque T2N (N·m)	输入轴尺寸 Shaft end input side								d_2	d_3	l_2	l_3	l_4	c	d_a	d_4	d_6	e	G_1	G_2	G_3	k	z	法兰孔尺寸 Flange bolts		重量 Weight (kg)	油量 Oil quantity (l)
		$i_N \leqslant 2000$				$i_N \geqslant 2240$																			s	n		
		d_1	l_1	r	t	d_1	l_1	r	t																			
9	22 000	35	70	10	38	30	60	8	33	120	115	65	2.5	67.5	24	428	350	356	119	435	165	320	388	$6^{\pm 1.5}$	18	24	280	7
10	31 000	35	70	10	38	30	60	8	33	130	125	70	2.5	72.5	28	472	394	400	119	455	174	320	436	$8^{\pm 1.5}$	18	28	330	9
11	42 000	35	70	10	38	30	60	8	33	140	135	82.5	2.5	85	32	525	425	436	119	486	204	320	485	$8^{\pm 1.5}$	22	20	390	15
12	60 000	35	70	10	38	30	60	8	33	160	155	90	2.5	92.5	34	605	495	510	119	500	224	320	555	$9^{\pm 1.5}$	26	20	530	20
13	83 000	35	70	10	38	30	60	8	33	180	175	95	2.5	97.5	39	645	535	554	119	558	241	320	595	$11^{\pm 1.5}$	26	24	670	21
14	117 000	35	70	10	38	30	60	8	33	210	205	105	2.5	107.5	42	720	610	629	119	581	278	320	665	9	26	32	940	33
16	160 000	45	80	14	48.5	35	60	10	38	230	225	110	2.5	112.5	44	770	660	680	137	693	285	375	715	10	26	36	1 137	42
17	202 000	45	80	14	48.5	35	60	10	38	250	245	120	2.5	122.5	50	895	750	775	137	719	294	375	830	10	33	24	1 660	60
18	244 000	50	100	14	53.5	40	80	12	43	260	255	120	2.5	122.5	50	930	785	815	172	818	303	445	865	10	33	32	2 100	70
19	295 000	50	100	14	53.5	40	80	12	43	280	275	135	2.5	137.5	56	980	840	870	172	841	327.5	445	915	12	33	36	2 200	85
20	354 000	50	100	14	53.5	40	80	12	43	300	295	135	2.5	137.5	56	980	840	870	172	841	327.5	445	915	12	33	36	2 300	75
21	392 000	50	100	14	53.5	40	80	12	43	310	305	152	2.5	154.5	62	1115	935	960	172	897.5	354	445	1025	24	39	32	2 930	115
22	450 000	50	100	14	53.5	40	80	12	43	330	325	152	2.5	154.5	62	1115	935	960	172	897.5	354	445	1025	24	39	32	3 100	105
23	513 000	60	110	18	64	50	100	14	53.5	350	345	164	2.5	166.5	68	1210	1025	1056	194	1003	380	520	1120	28	39	36	3 800	155
24	592 000	60	110	18	64	50	100	14	53.5	360	355	164	2.5	166.5	68	1210	1025	1056	194	1003	380	520	1120	28	39	36	4 300	135
25	684 000	60	110	18	64	50	100	14	53.5	380	375	180	2.5	182.5	74	1320	1115	1150	194	1065	407	520	1220	29	45	36	5 250	195
26	763 000	60	110	18	64	50	100	14	53.5	400	395	180	2.5	182.5	74	1320	1115	1150	194	1065	407	520	1220	29	45	36	5 660	170
27	852 000	75	135	20	79.5	60	110	18	64	430	425	191	2.5	193.5	81	1460	1215	1248	240	1205.5	453	615	1345	31	52	32	6 680	250
28	950 000	75	135	20	79.5	60	110	18	64	450	445	191	2.5	193.5	81	1460	1215	1248	240	1205.5	453	615	1345	31	52	32	7 180	220
29	1 060 000	75	135	20	79.5	60	110	18	64	460	450	197.5	5	202.5	87	1565	1320	1355	240	1252.5	483	615	1450	34	52	36	8 500	310
30	1 200 000	75	135	20	79.5	60	110	18	64	480	470	197.5	5	202.5	87	1565	1320	1355	240	1252.5	483	615	1450	34	52	36	9 070	280

注：1 当d1≤100时公差为m6,当d1>100时公差为n6;
2 当尺寸d2或d3≤160时，公差为h6;
当尺寸d2或d3>160时，公差为g6;
3 重量不包括胀紧盘和润滑油。

Note: 1 When shaft diameter d1≤100, tolerance is m6,
When shaft diameter d1 >100, tolerance is n6;
2 When shaft diameter d2 or d3 ≤160, tolerance h6;
When shaft diameter d2 or d3 >160, tolerance g6;
3 Weight without shrink disk and oil.

P系列组合型：

P series combination:

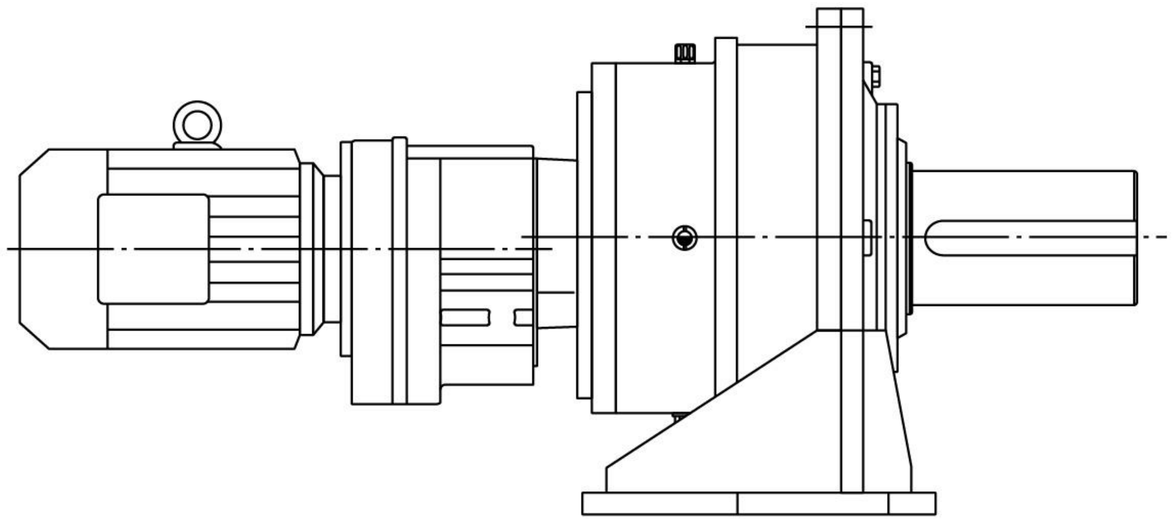

P../R系列组合，详情来电咨询。

P../R combination please consult us.

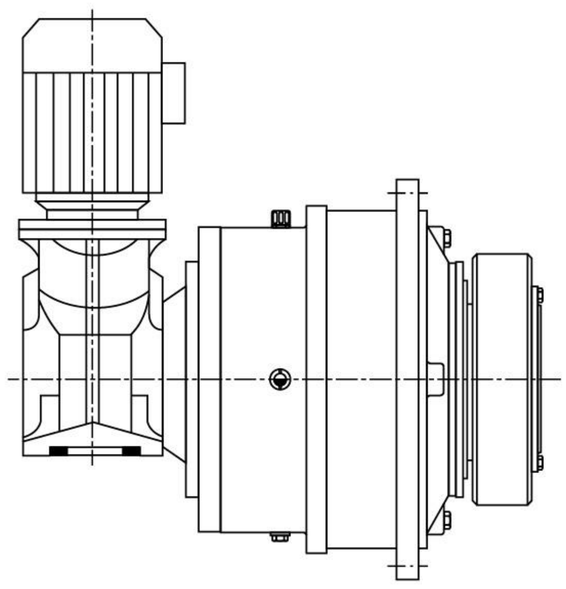

P../K系列组合，详情来电咨询。

P../K combination please consult us.

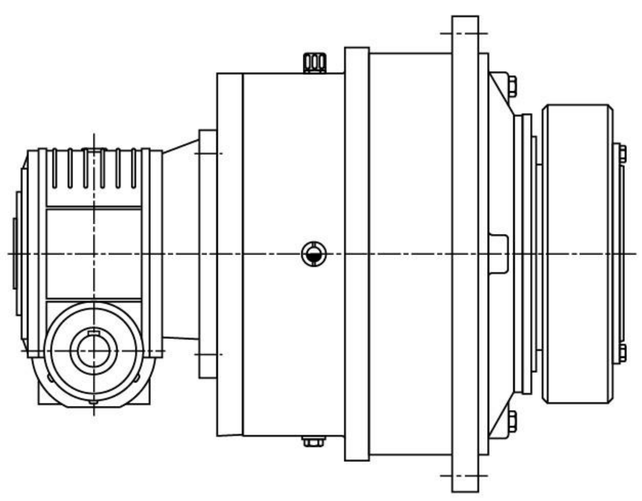

P../RV(160-250) 组合，详情来电咨询。

P../RV(160-250) combination please consult us.

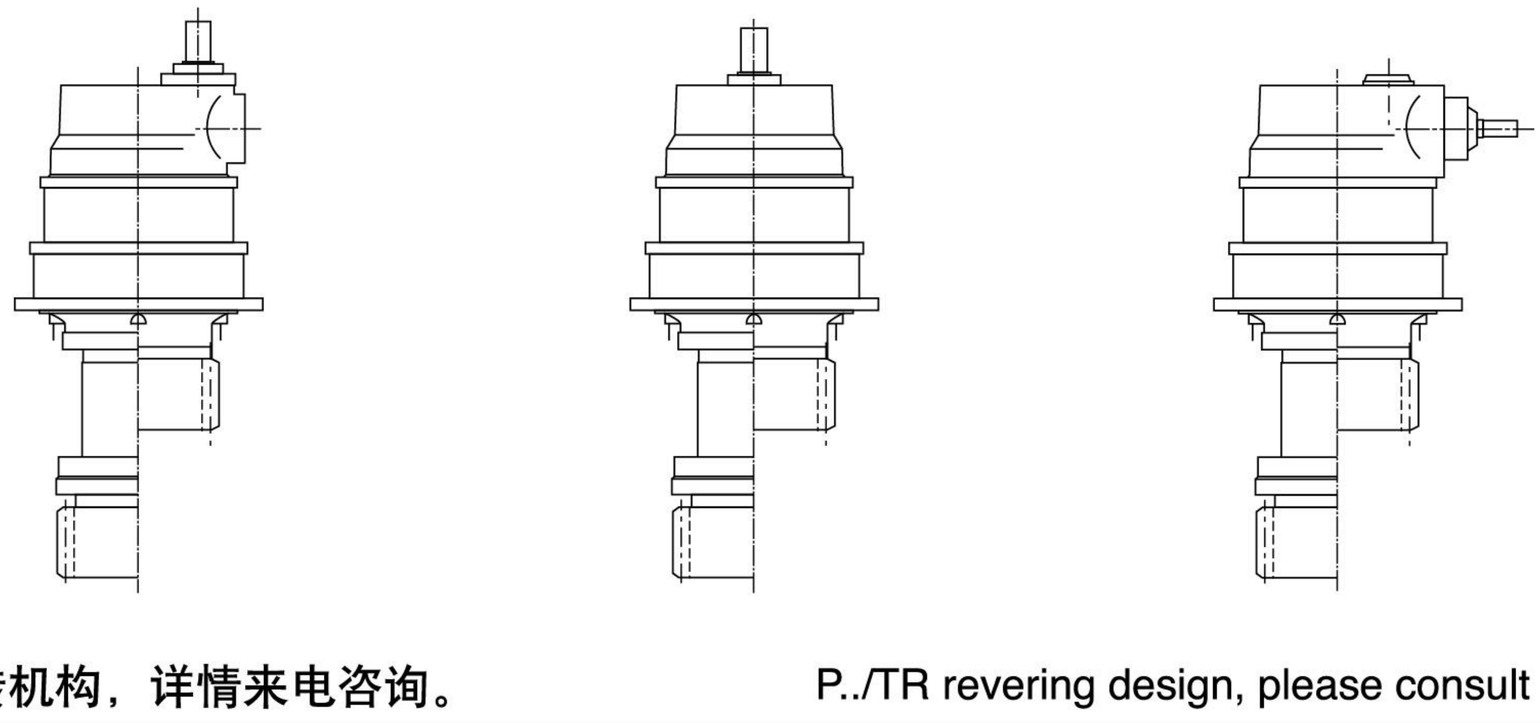

P../TR回转机构，详情来电咨询。

P../TR revering design, please consult us.

输出法兰孔布置图：

Hole patterns on output flanges:

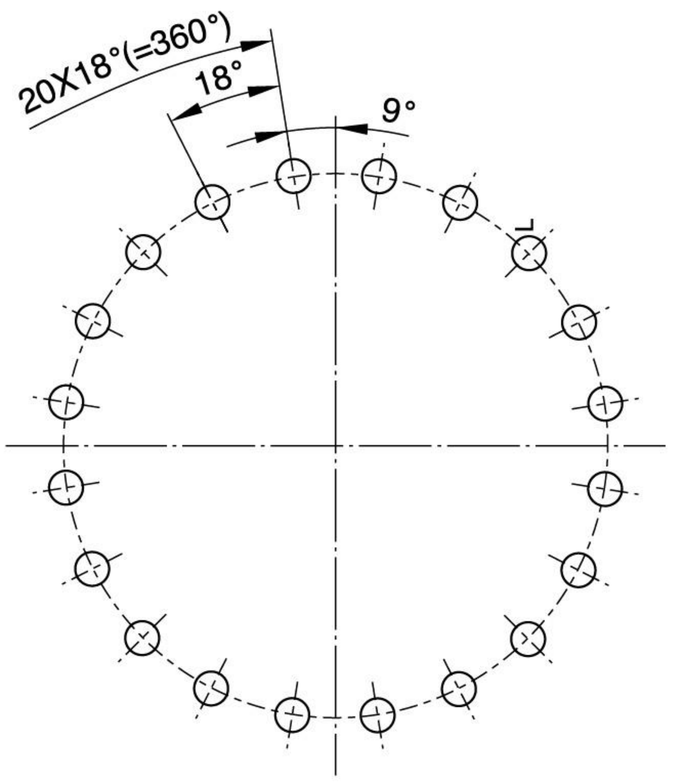

P...11, 12

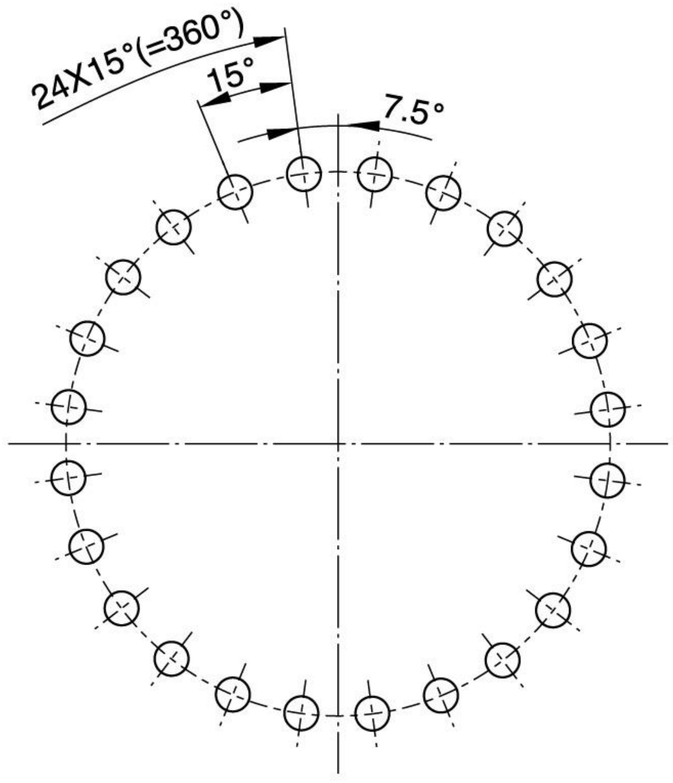

P...9, 13, 17

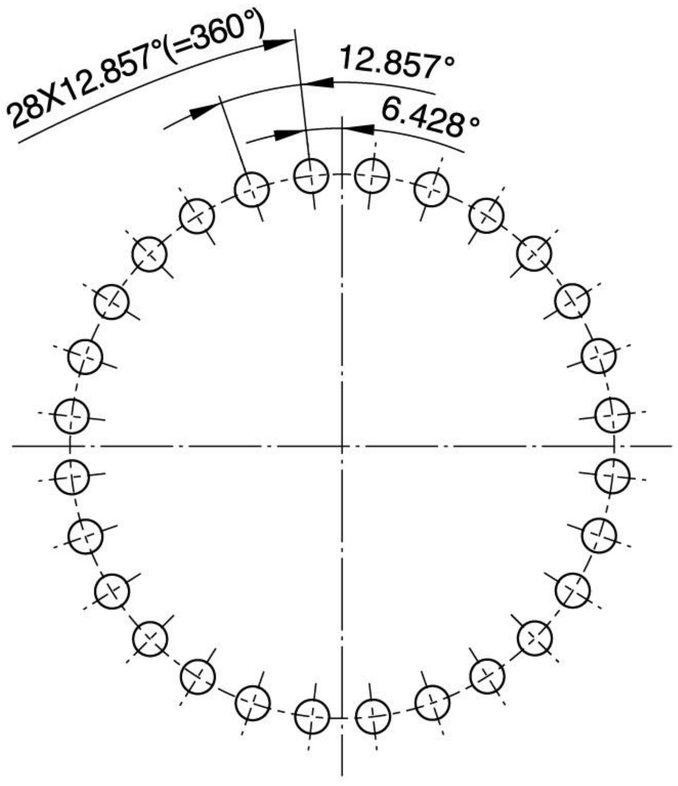

P...10

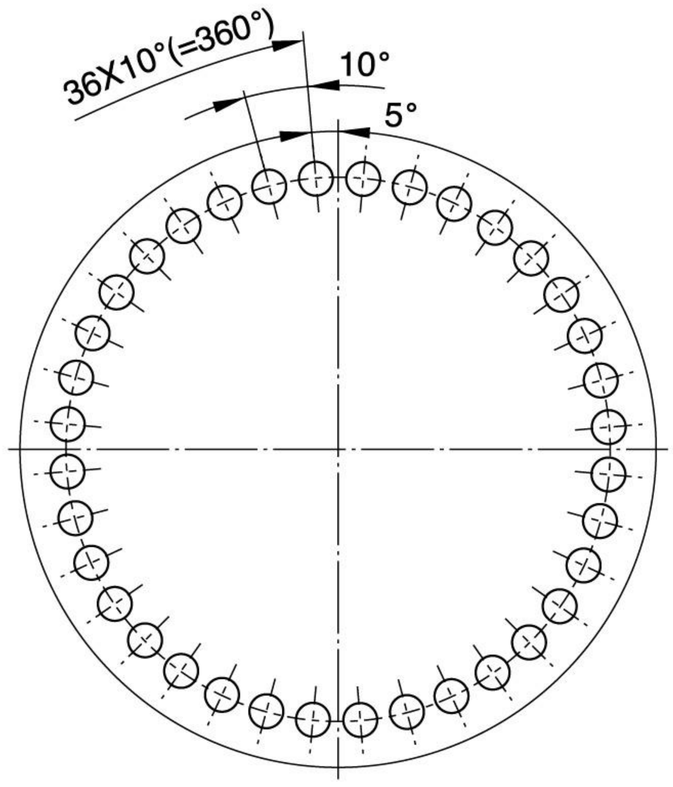

P...16, 19, 20, 23, 24, 25, 26, 29, 30, 33, 34

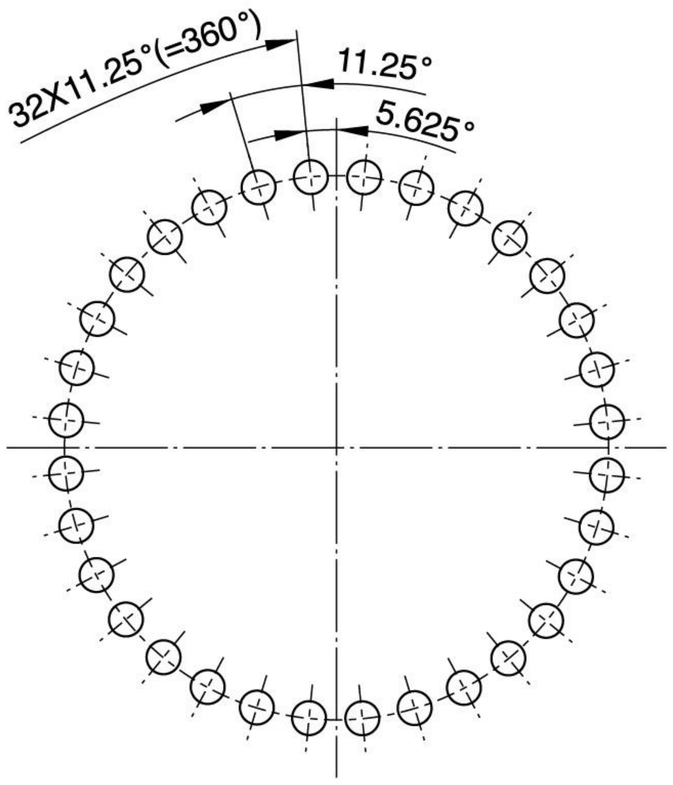

P...14, 18, 21, 22, 27, 28, 31, 32

P系列齿轮箱输出轴：

P series gear units output shaft:

空心轴：

Hollow shaft:

带胀紧盘的空心输出轴
Hollow Shaft for Shrink Disk

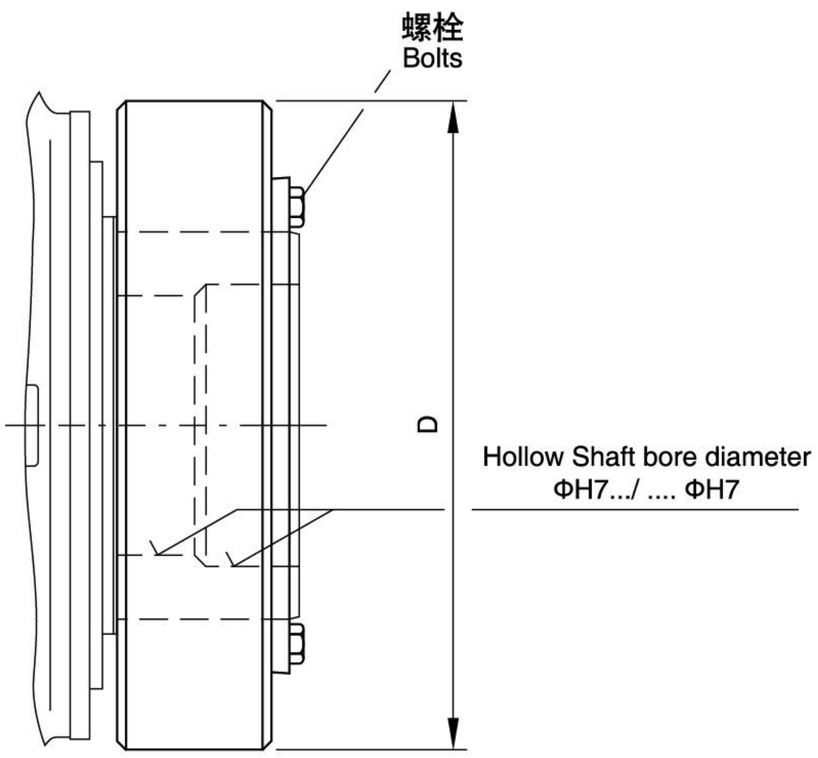

渐开线花键空心输出轴
Hollow Shaft with Involute Splines

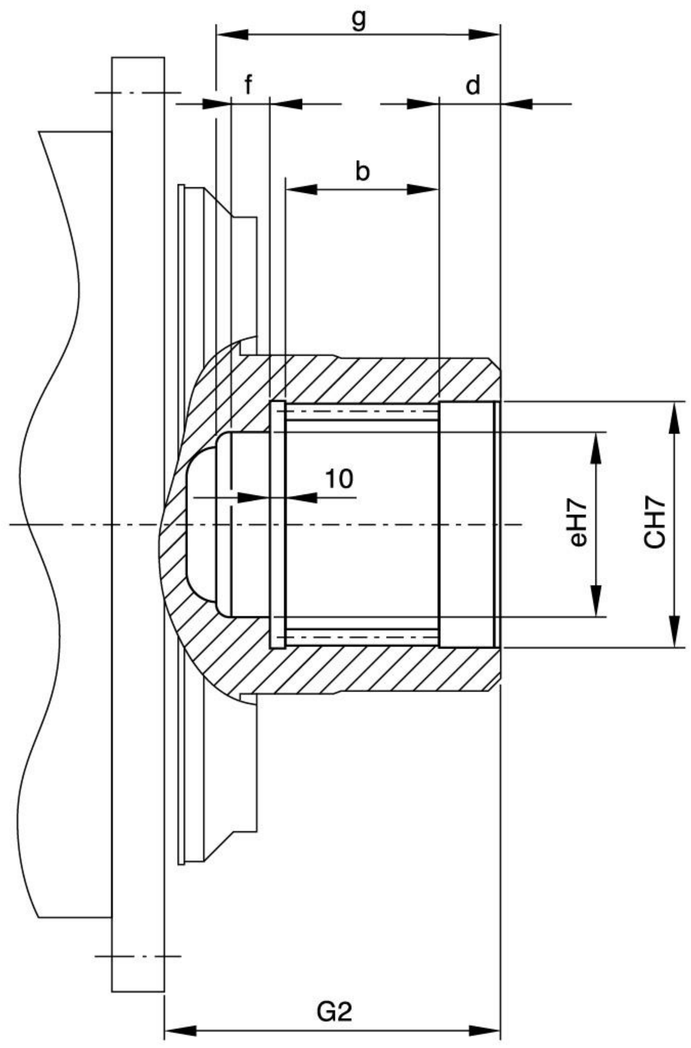

花键齿形按 DIN 5480
Hollow shaft with involute splines acc. to DIN 5480.

P

机座号 Type	许用扭矩 Nominal torque T_{2N} (N · m)	胀紧盘 Hollow Shaft for Shrink Disk				空心花键输出轴 Hollow Shaft with Involute Splines							
		型号 Size	D	螺栓 Bolts	重量 Weigth (kg)	内花键规格 Type of involute splines	b	c	d	e	f	G2	g
9	22000	155	263	M14	15.2	120X5X30X22X9H	70	122	40	107	20	165	150
10	31000	165	290	M16	21.5	130X5X30X24X9H	80	132	40	117	20	174	160
11	42000	185	320	M16	32.7	140X5X30X26X9H	90	142	45	125	25	204	180
12	60000	220	370	M20	53	160X5X30X30X9H	100	162	45	145	25	223	190
13	83000	240	405	M20	66	180X5X30X34X9H	110	182	45	165	25	237	200
14	117000	280	460	M20	103	210X5X30X40X9H	125	212	45	195	25	264	215
16	160000	300	485	M24	120	240X8X30X28X9H	140	242	50	220	25	285	235
17	202000	320	520	M24	138	250X8X30X30X9H	150	252	50	230	30	290	250
18	244000	340	570	M24	189	260X8X30X31X9H	160	262	50	240	30	303	260
19	295000	360	590	M24	207	280X8X30X34X9H	170	282	50	260	30	327.5	270
20	354000	380	640	M27	244	300X8X30X36X9H	180	302	50	280	30	327.5	280
21	392000	390	650	M27	249	310X8X30X37X9H	190	312	60	290	40	354	310
22	450000	420	670	M27	285	330X8X30X40X9H	200	332	60	310	40	354	320
23	513000	440	720	M27	357	340X8X30X41X9H	200	342	60	320	40	348	320
24	592000	460	770	M27	419	360X8X30X44X9H	220	362	60	340	40	368	340
25	684000	480	800	M30	492	380X8X30X46X9H	230	382	60	360	40	372	350
26	763000	500	850	M30	567	400X8X30X48X9H	240	402	60	380	40	382	360
27	852000	530	910	M30	744	440X8X30X54X9H	250	442	60	420	40	423	370
28	950000	560	940	M30	776	450X8X30X55X9H	260	452	65	430	40	428	385
29	1060000	560	940	M30	836	460X8X30X56X9H	270	462	65	440	45	433	400
30	1200000	590	960	M30	845	480X8X30X58X9H	285	482	65	460	45	448	415
31	1330000	590	960	M30	935								
32	1500000	620	1020	M30	1064								
33	1680000	660	1070	M33	1178								
34	1920000	700	1140	M33	1345								

实心轴：

Solid shaft:

带平键的实心输出轴
Solid Shaft with flat Key

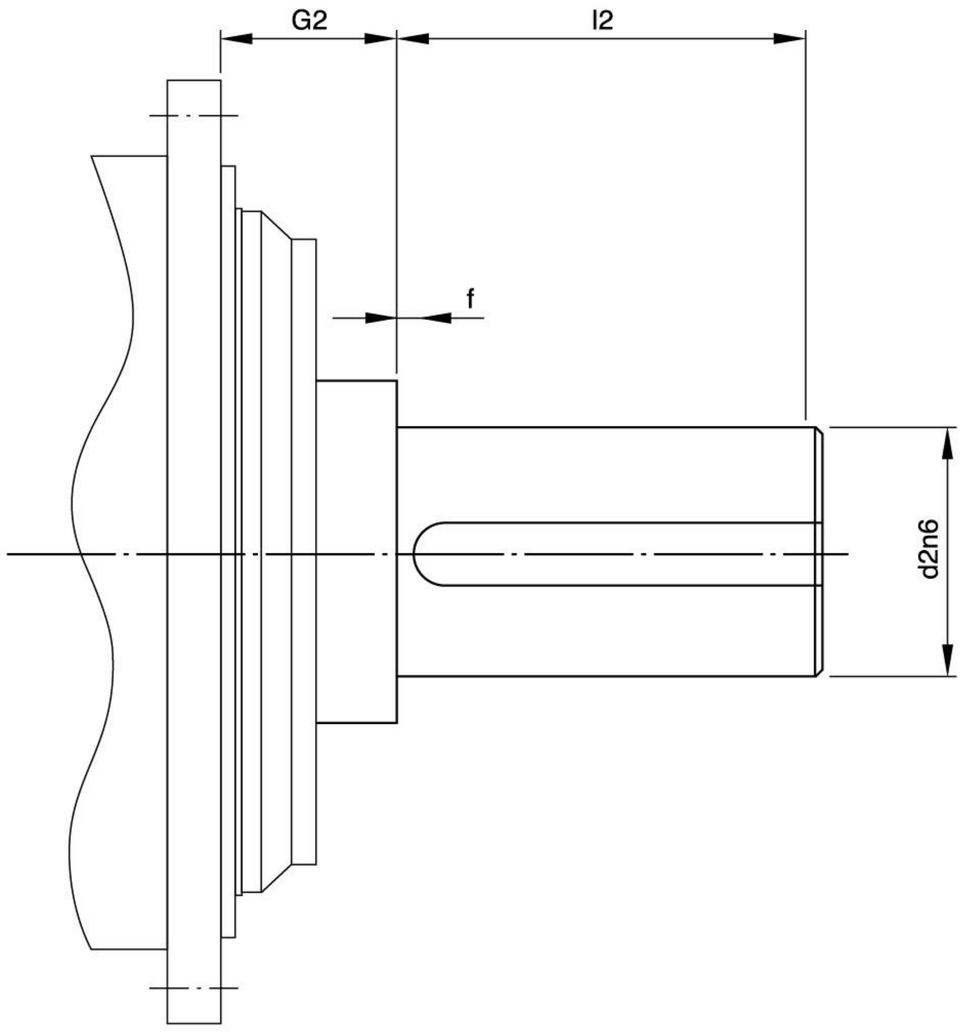

渐开线花键实心输出轴
Solid Shaft with Involute Splines

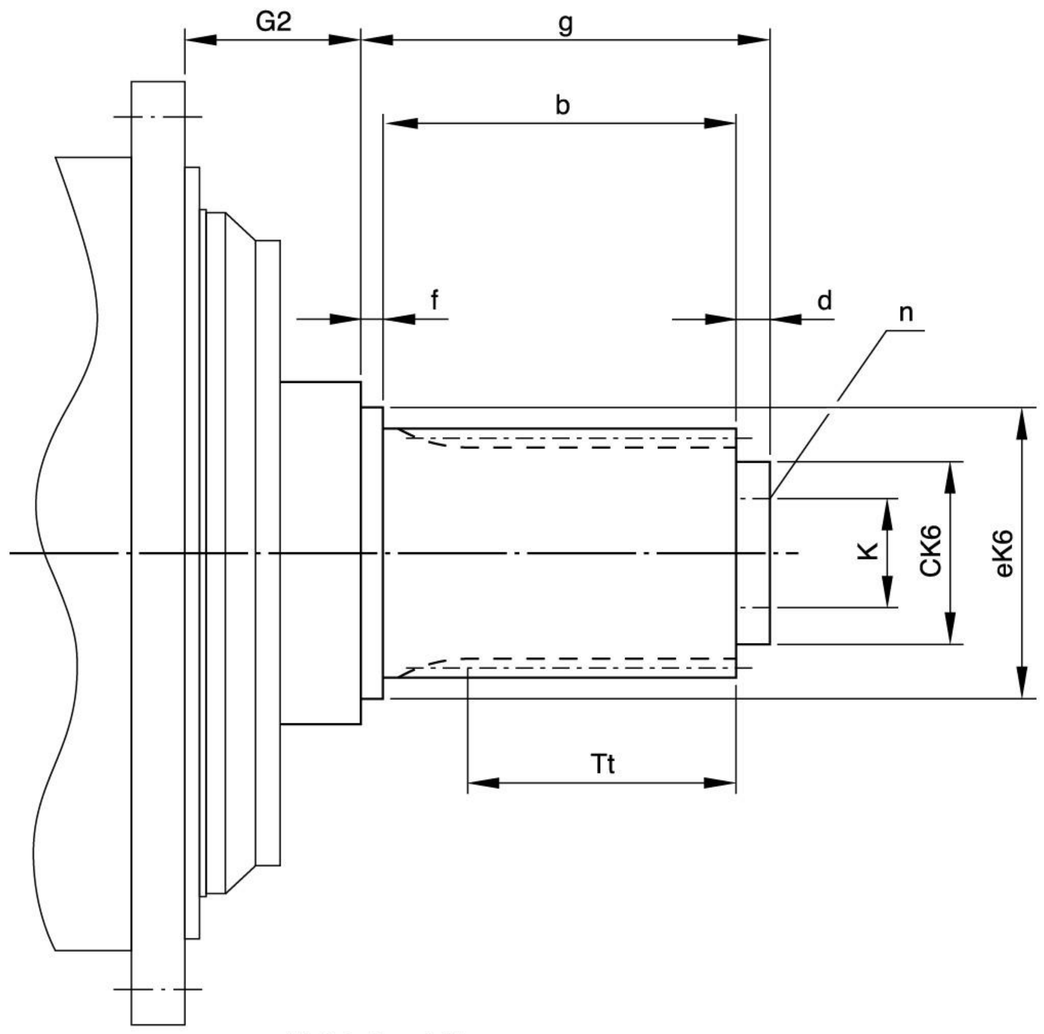

花键齿形按 D5480
Hollow shaft with involute splines acc. to DIN 5480.

P

机座号 Type	许用扭矩 Nominal torque T_{2N} (N · m)	带平键实心轴 Solid shaft with Parallel Key			实心花键输出轴 Hollow Shaft with Involute Splines										
		d2	l2	G2	外花键规格 Type of involute splines	Tt	b	c	d	e	f	g	k	n	G2
9	22000	120	210	95	130X5X30X24X8m	70	80	110	20	132	20	120	80	3XM16X24	95
10	31000	130	210	95	140X5X30X26X8m	80	90	120	20	142	20	130	90	3XM16X24	95
11	42000	150	240	109	160X5X30X30X8m	90	100	140	25	162	25	150	110	3XM16X24	109
12	60000	160	270	106	180X5X30X34X8m	100	110	90	25	182	25	160	130	3XM16X24	106
13	83000	180	310	118	200X5X30X38X8m	110	120	100	30	202	25	175	140	3XM16X24	118
14	117000	210	350	139	220X5X30X42X8m	125	135	120	30	222	30	195	160	3XM16X24	139
16	160000	230	350	142	250X8X30X30X8m	140	155	140	35	252	30	220	185	3XM20X30	142
17	202000	250	400	139	260X8X30X31X8m	150	165	155	40	262	35	240	200	3XM20X30	139
18	244000	260	400	134	280X8X30X34X8m	160	175	170	40	282	35	250	215	3XM20X30	134
19	295000	280	450	148.5	300X8X30X36X8m	170	185	180	40	302	35	260	225	3XM20X30	148.5
20	354000	300	500	148.5	310X8X30X37X8m	180	195	190	40	312	35	270	235	6XM20X30	148.5
21	392000	310	500	158	320X8X30X38X8m	190	205	200	40	322	35	280	250	6XM20X30	158
22	450000	330	500	158	340X8X30X41X8m	200	215	210	40	342	35	290	265	6XM20X30	158
23	513000	350	550	175	360X8X30X44X8m	200	215	230	40	362	35	290	275	6XM20X30	175
24	592000	360	590	175	380X8X30X46X8m	220	235	245	40	382	35	310	290	6XM20X30	175
25	684000	380	590	182	400X8X30X48X8m	230	245	260	40	402	35	320	310	6XM24X36	182
26	763000	400	650	182	420X8X30X51X8m	240	255	280	40	422	35	330	330	6XM24X36	182
27	852000	430	690	196.5	440X8X30X54X8m	250	265	310	40	442	35	340	370	6XM24X36	196.5
28	950000	450	750	196.5	450X8X30X55X8m	260	275	330	45	452	40	360	380	6XM24X36	196.5
29	1060000	460	750	209	460X8X30X56X8m	270	285	340	45	462	40	370	390	6XM24X36	209
30	1200000	480	790	209	480X8X30X58X8m	285	300	360	45	482	40	385	410	6XM24X36	209
31	1330000	500	790	232											
32	1500000	510	850	232											
33	1690000	530	900	251											
34	1920000	570	950	251											

附件：

Attachments:

齿轮箱机座(附件代号-96):

Gear Housing Base:

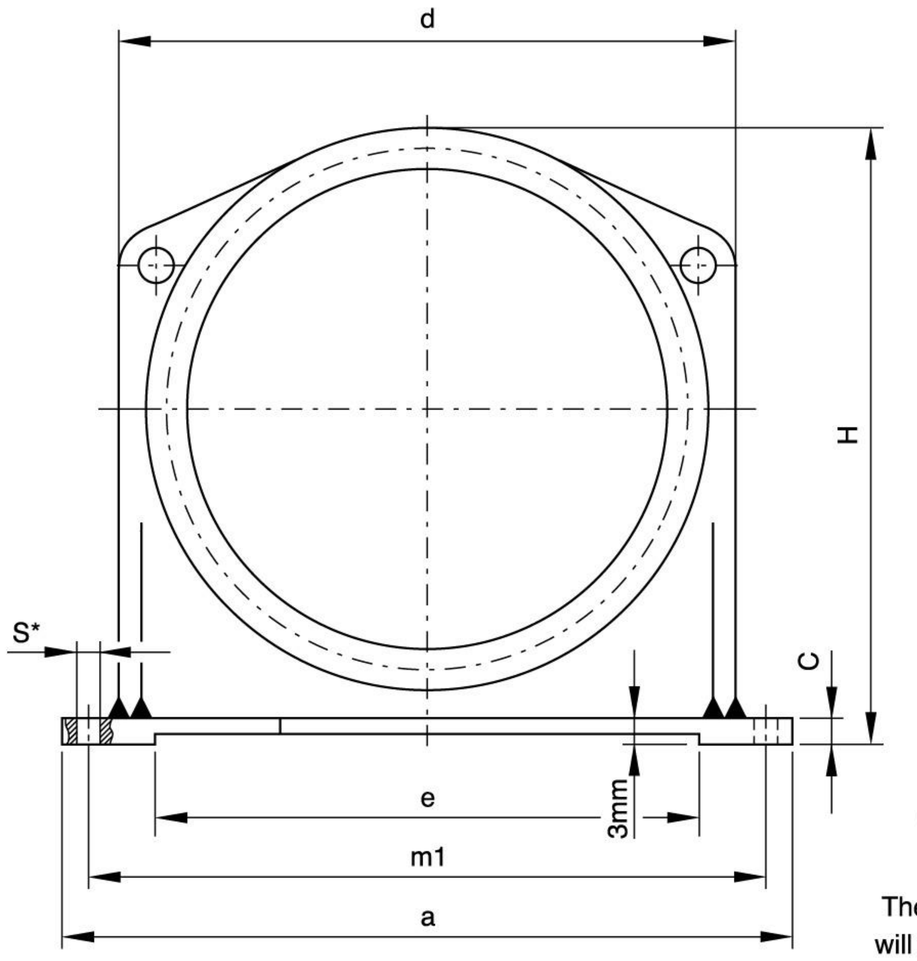

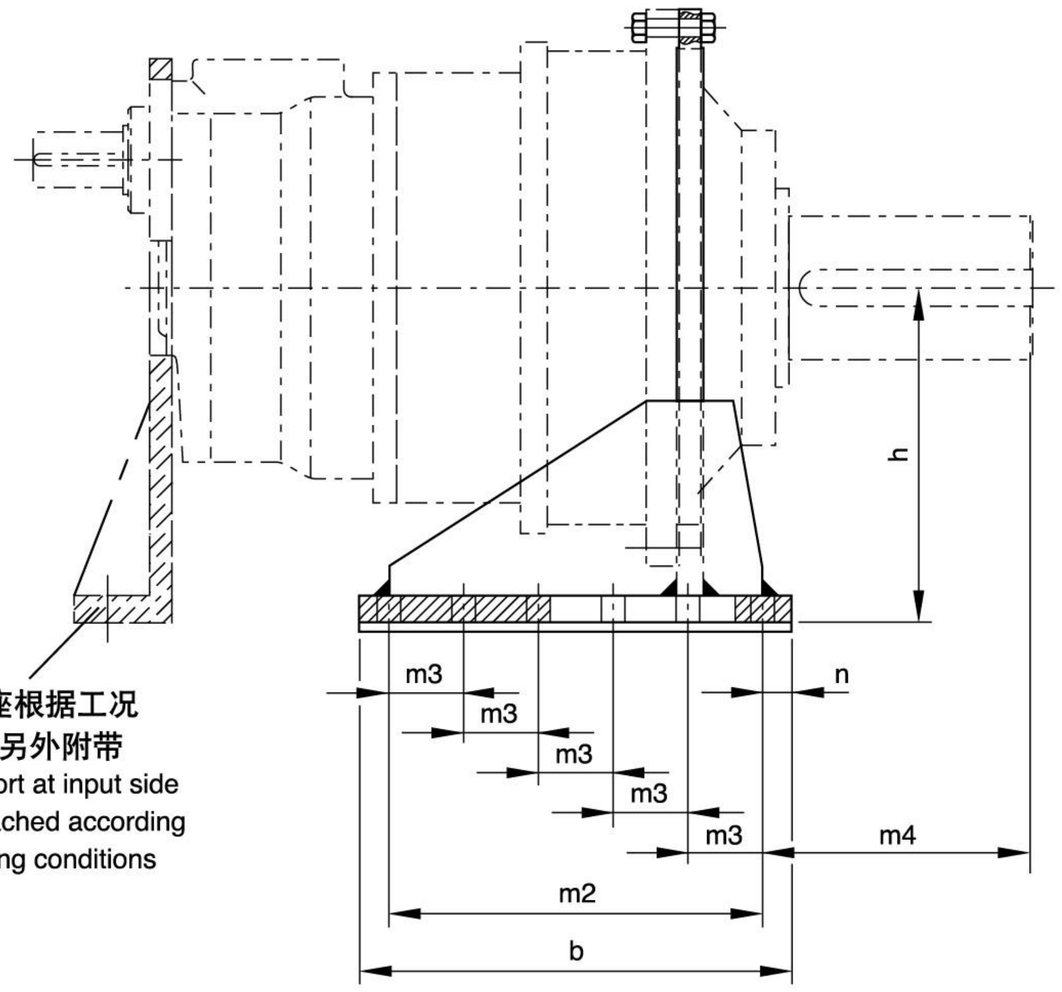

前支座根据工况
要求另外附带
The support at input side
will be attached according
to working conditions

Size	a	b	c	d	e	h	H	m1	m2	m3	m4	n	螺栓孔 Bolt		重量 Weight (kg)
													s*	数量 No.	
9	580	330	20	450	380	260	480	520	260	130	240	35	26	2X3	56
10	630	360	25	500	430	280	525	570	290	145	240	35	26	2X3	82
11	680	400	30	550	480	315	585	620	330	110	274	35	26	2X4	122
12	760	450	30	630	560	360	670	700	380	95	292	35	26	2X5	157
13	820	490	35	680	610	390	720	750	420	105	334	35	26	2X5	213
14	920	560	35	760	680	430	800	840	480	120	380	40	33	2X5	270
16	980	580	40	820	700	470	865	900	500	125	374	40	33	2X5	350
17	1130	670	45	940	810	540	998	1040	580	145	405	45	39	2X5	520
18	1180	720	45	980	830	560	1035	1080	620	155	385	50	39	2X5	580
19	1260	760	50	1050	880	590	1090	1160	640	160	450	60	45	2X5	720
20	1260	760	50	1050	880	590	1090	1160	640	160	500	60	45	2X5	720
21	1440	840	55	1170	1020	660	1228	1320	700	175	513	70	52	2X5	940
22	1440	840	55	1170	1020	660	1228	1320	700	175	513	70	52	2X5	940
23	1540	910	60	1270	1100	730	1345	1420	750	150	567	80	52	2X6	1275
24	1540	910	60	1270	1100	730	1345	1420	750	150	607	80	52	2X6	1275
25	1700	1000	65	1400	1240	795	1465	1550	860	215	574	70	62	2X5	1670
26	1700	1000	65	1400	1240	795	1465	1550	860	215	634	70	62	2X5	1670
27	1850	1100	70	1550	1370	870	1610	1700	950	190	664	75	62	2X6	2170
28	1850	1100	70	1550	1370	870	1610	1700	950	190	724	75	62	2X6	2170
29	1980	1180	75	1640	1460	925	1715	1820	1000	250	731	90	70	2X5	2650
30	1980	1180	75	1640	1460	925	1715	1820	1000	250	771	90	70	2X5	2650
31	2150	1300	75	1750	1570	1000	1845	1950	1100	220	773	100	70	2X6	3100
32	2150	1300	75	1750	1570	1000	1845	1950	1100	220	833	100	70	2X6	3100
33	2230	1350	85	1850	1630	1050	1940	2050	1150	230	883	100	78	2X6	3850
34	2230	1350	85	1850	1630	1050	1940	2050	1150	230	933	100	78	2X6	3850

单向扭力臂(附件代号-75)：

Torque Reaction Arm on one Side for coupling Bar:

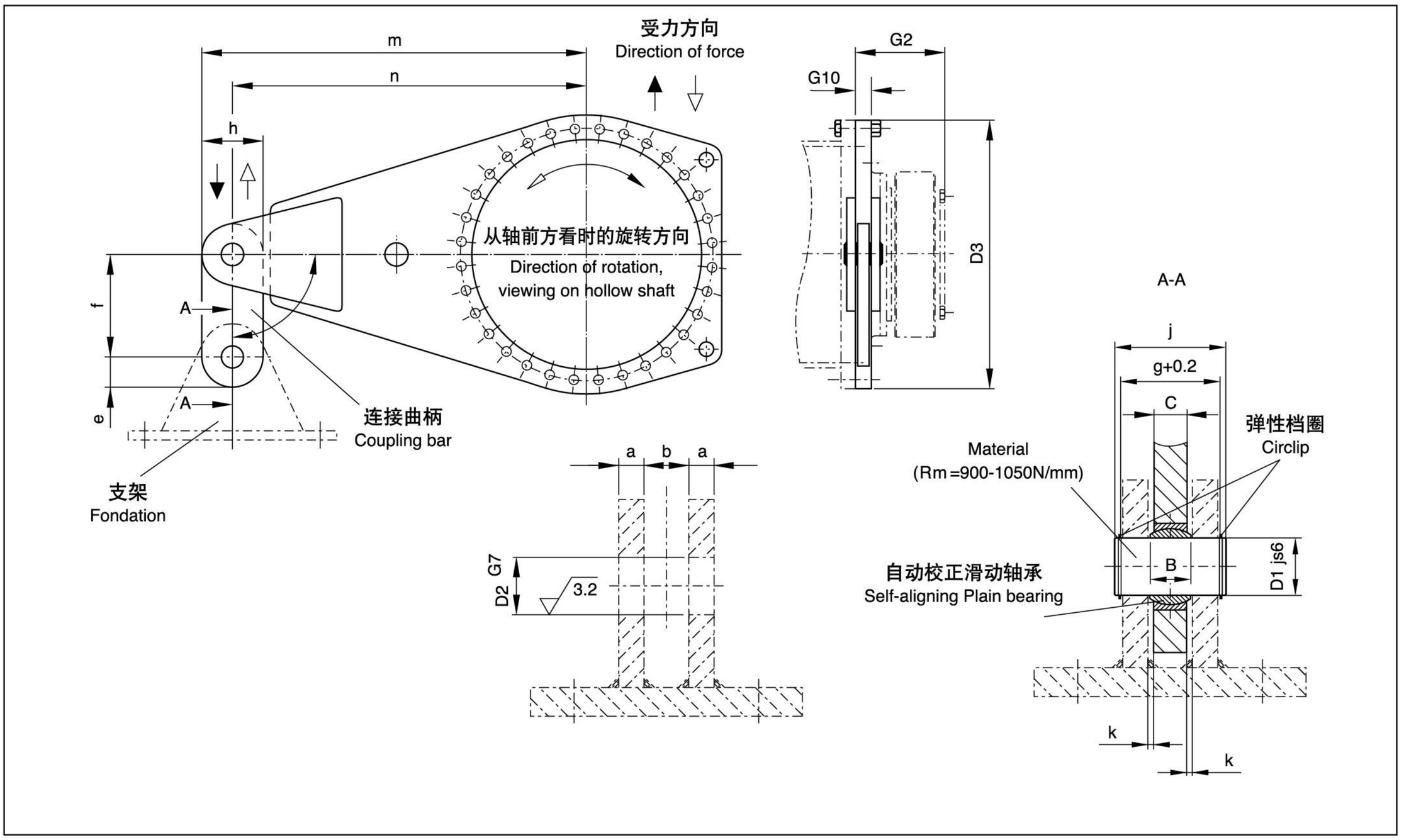

Size	T2N (N · m)	D1	D2	D3	G2	G10	a min.	b	B*	c	e	f	g +0.2	h	j	k	m	n	滑动轴承 Plain bearing	Weight (kg)
9	22000	30		440	165	25	15	25	22	18	50	140	59.5	100	70	3.5	605	555	30	38
10	31000	35		485	174	30	15	30	25	20	52.5	140	64.5	105	75	5	667.5	615	35	51
11	42000	40		540	204	30	18	30	28	22	65	160	70.5	130	85	4	750	685	40	82
12	60000	40		620	224	30	18	30	28	22	65	160	70.5	130	85	4	850	785	40	85
13	83000	45		665	241	35	20	35	32	25	72.5	180	79.5	145	95	5	912.5	840	45	113
14	117000	50		740	278	40	20	40	35	30	72.5	200	85	145	100	5	1012.5	940	50	145
16	160000	60		790	285	50	25	50	44	35	77.5	240	105	155	120	7.5	1077.5	1000	60	206
17	202000	60		915	294	50	25	50	44	35	85	240	105	170	120	7.5	1250	1165	60	274
18	244000	70		955	303	55	30	55	49	40	105	280	120	210	135	7.5	1315	1210	70	365
19	295000	80		1005	327.5	60	30	60	55	45	105	320	125	210	145	7.5	1405	1300	80	423
20	354000	80		1005	327.5	60	30	60	55	45	105	320	125	210	145	7.5	1405	1300	80	423
21	392000	80		1140	354	60	30	60	55	45	113	320	125	225	145	7.5	1562.5	1450	80	530
22	450000	80		1140	354	60	30	60	55	45	113	320	125	225	145	7.5	1562.5	1450	80	530
23	513000	90		1235	380	65	30	65	60	50	125	360	130	250	150	7.5	1700	1575	90	665
24	592000	90		1235	380	65	30	65	60	50	125	360	130	250	150	7.5	1700	1575	90	665
25	684000	100		1350	407	75	35	75	70	55	138	400	150	275	170	10	1857.5	1720	100	940
26	763000	100		1350	407	75	35	75	70	55	138	400	150	275	170	10	1857.5	1720	100	940
27	852000	110		1490	453	75	35	75	70	55	150	440	150	300	175	10	2050	1900	110	1120
28	950000	110		1490	453	75	35	75	70	55	150	440	150	300	175	10	2050	1900	110	1120
29	1060000	110		1600	483	75	35	75	70	55	158	440	150	315	175	10	2192.5	2035	110	1260
30	1200000	110		1600	483	75	35	75	70	55	158	440	150	315	175	10	2192.5	2035	110	1260
31-34	On request																			

*) B=22-35，公差为-0.12
B=44-55，公差为-0.15
B=60-70，公差为-0.20

*) Nominal size B=22-35, tolerance-0.12
Nominal size B=44-55, tolerance-0.15
Nominal size B=60-70, tolerance-0.20

带橡胶衬套的双向扭力臂(附件代号-76)：

Torque Reaction Arm on Two Sides with Rubber Bushes:

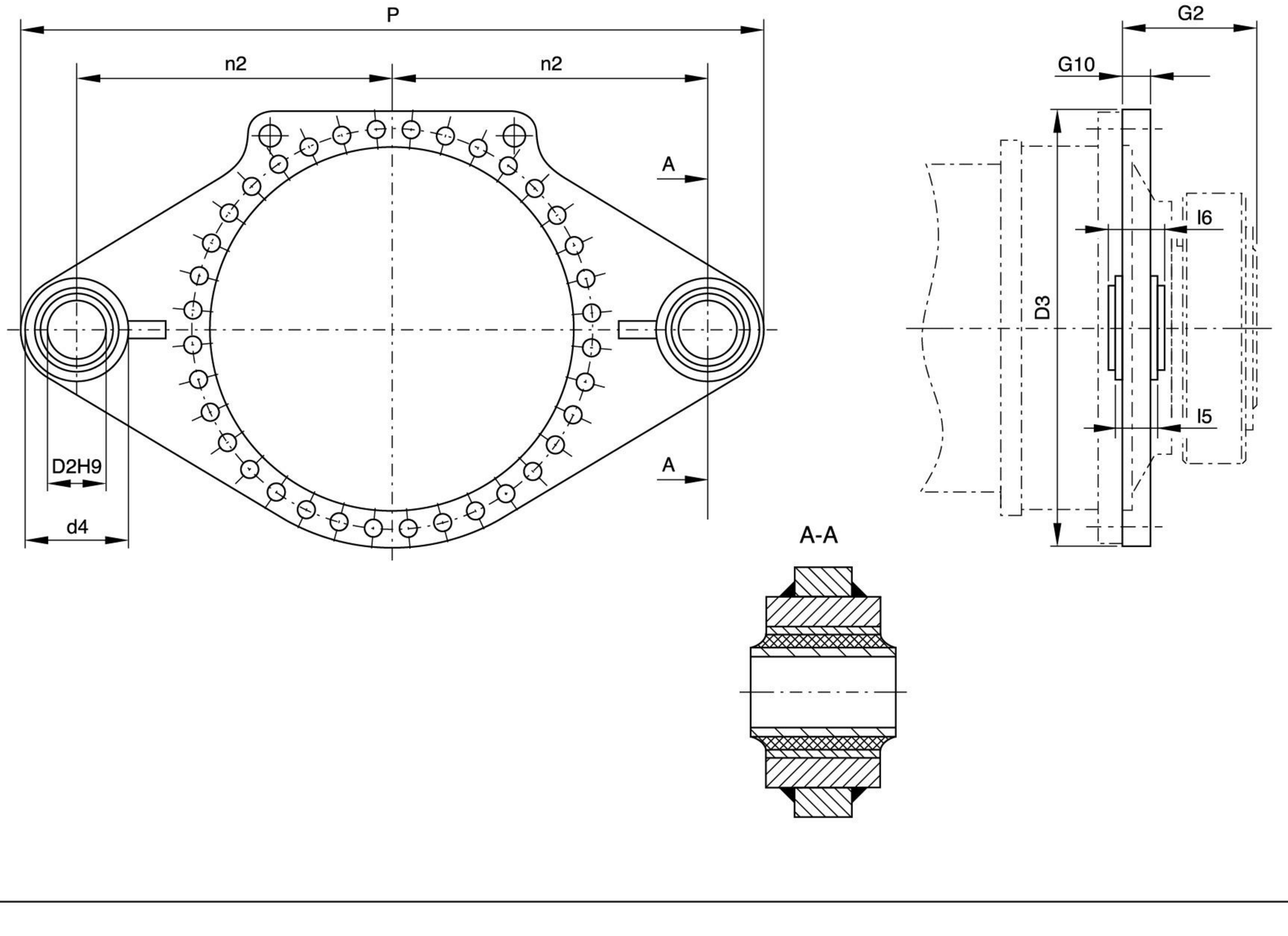

Size	T2N (N · m)	D2*	D3	d4	G2	G10	l5	l6	n2	P	衬套 Bush	质量 Weight (kg)
9	22000	50	440	115	165	30	100	110	500	1140	0118095	58
10	31000	50	485	115	174	30	100	110	500	1240	0118095	72
11	42000	100	540	180	204	30	110	120	575	1355	0118772	95
12	60000	100	620	180	224	35	110	120	625	1455	0118772	120
13	83000	110	665	210	241	35	170	180	600	1435	0118802	145
14	117000	110	740	210	278	40	170	180	650	1535	0118802	170
16	160000	124	790	240	285	40	220	230	700	1670	0118805	230
17	202000	124	915	240	288	40	220	230	750	1770	0118805	300
18	244000	124	955	240	303	50	220	230	900	2070	0118805	400

* 销轴 Pin: Φh8

扭转轴支架(附件代号-77):

Torsion Shaft Support:

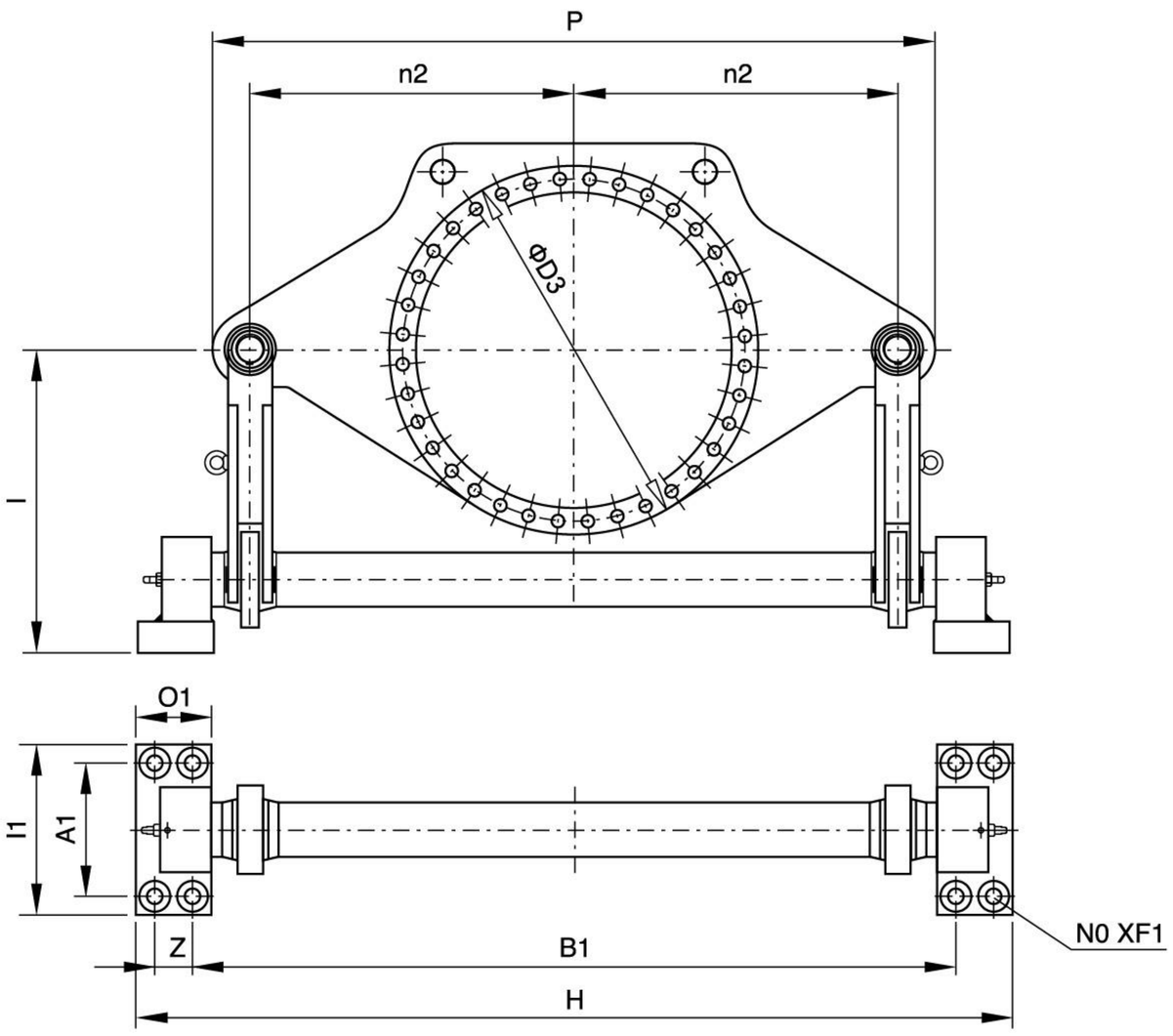

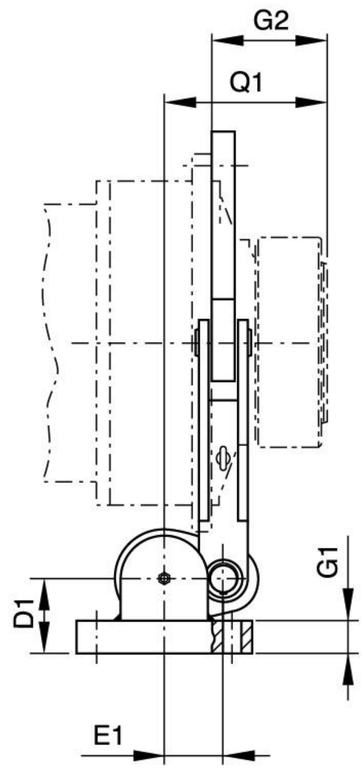

P

Size	T2N (N · m)	A1	B1	D3	D1	E1	F1	G1	G2	H	I	I1	n2	N0	O1	P	Q1	Z	重量 Weight (kg)
9	22000	250	1414	610	120	105	33	48.5	165	1619	560	330	550	8	140	1230	247.5	65	300
10	31000	250	1414	610	120	105	33	48.5	174	1619	560	330	550	8	140	1230	256.5	65	300
11	42000	250	1414	610	120	105	33	48.5	204	1619	560	330	550	8	140	1230	286.5	65	300
12	60000	250	1414	610	120	105	33	48.5	224	1619	560	330	550	8	140	1230	306.5	65	300
13	83000	280	1604	775	155	145	39	68.5	241	1837	620	380	650	8	158	1450	358.5	75	600
14	117000	280	1604	775	155	145	39	68.5	278	1837	620	380	650	8	158	1450	395.5	75	600
16	160000	280	1604	775	155	145	39	68.5	285	1837	620	380	650	8	158	1450	402.5	75	600
17	202000	315	1777	955	170	165	39	73.5	294	2041	700	400	750	8	180	1680	431.5	84	900
18	244000	315	1777	955	170	165	39	73.5	303	2041	700	400	750	8	180	1680	440.5	84	900
19	295000	350	2000	985	195	175	45	83.5	328	2300	860	450	850	8	200	1900	470.5	100	1400
20	354000	350	2000	985	195	175	45	83.5	328	2300	860	450	850	8	200	1900	470.5	100	1400
21	392000	400	2254	1120	210	190	45	88.5	354	2591	900	530	950	8	225	2110	506.5	113	1700
22	450000	400	2254	1120	210	190	45	88.5	354	2591	900	530	950	8	225	2110	506.5	113	1700
23	513000	450	2496	1215	235	220	45	98.5	380	2871	1060	590	1063	8	250	2385	562.5	125	2150
24	592000	450	2496	1215	235	220	45	98.5	380	2871	1060	590	1063	8	250	2385	562.5	125	2150
25	684000	500	2816	1350	275	245	52	118.5	407	3236	1200	650	1150	8	280	2600	614.5	140	2700
26	763000	500	2816	1350	275	245	52	118.5	407	3236	1200	650	1150	8	280	2600	614.5	140	2700
27	852000	530	2887	1490	300	255	52	128.5	453	3327	1250	700	1250	8	290	2820	670.5	150	3400
28	950000	530	2887	1490	300	255	52	128.5	453	3327	1250	700	1250	8	290	2820	670.5	150	3400
29	1060000	560	3200	1565	300	280	62	128.5	483	3673	1350	750	1360	8	315	3080	718	158	4350
30	1200000	560	3200	1565	300	280	62	128.5	483	3673	1350	750	1360	8	315	3080	718	158	4350
31	1330000	590	3408	1695	340	300	70	148.5	538	3906	1400	790	1450	8	330	3260	788	168	5500
32	1500000	590	3408	1695	340	300	70	148.5	538	3906	1400	790	1450	8	330	3260	788	168	5500
33	1680000	620	3588	1785	375	320	70	158.5	573	4116	1500	840	1550	8	350	3520	840.5	178	7000
34	1920000	620	3588	1785	375	320	70	158.5	573	4116	1500	840	1500	8	350	3520	840.5	178	7000

电机安装支架: Motor Bracket:

电机安装支架(附件代号-71)
Motor bracket

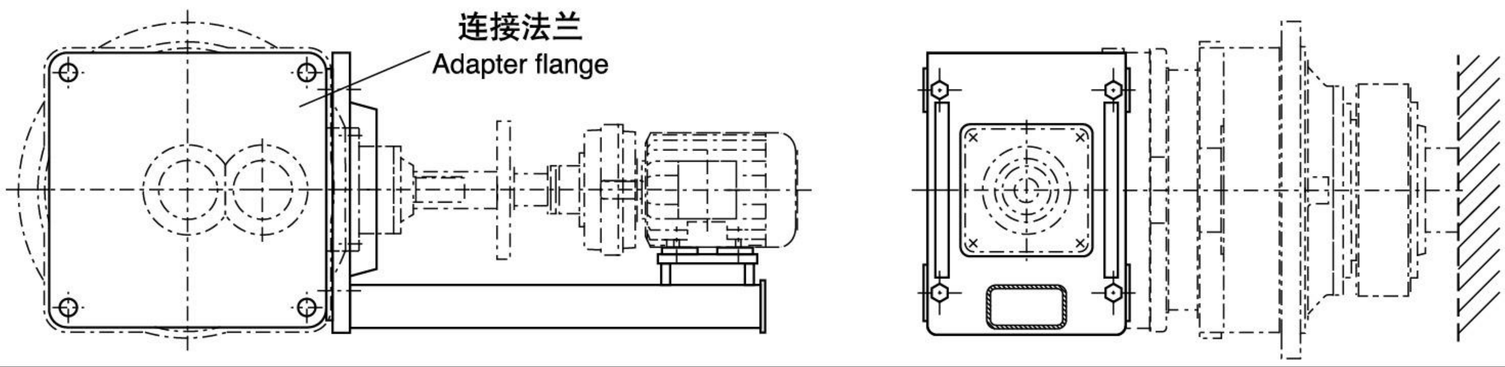

电机安装支架(附件代号-71)
Motor bracket

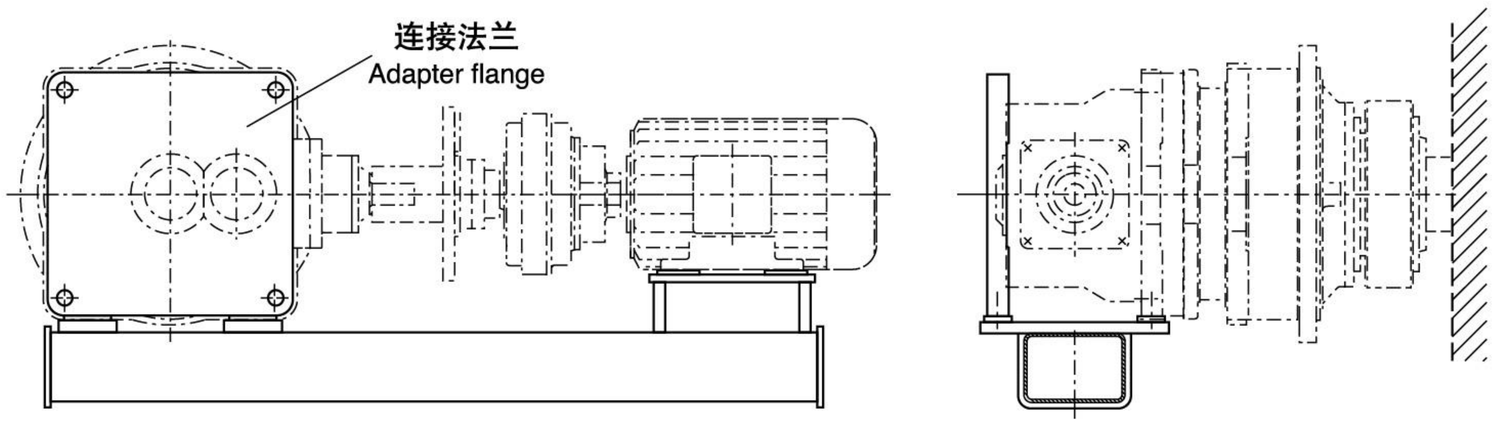

卧式电机安装支架(附件代号-72)
Motor bracket

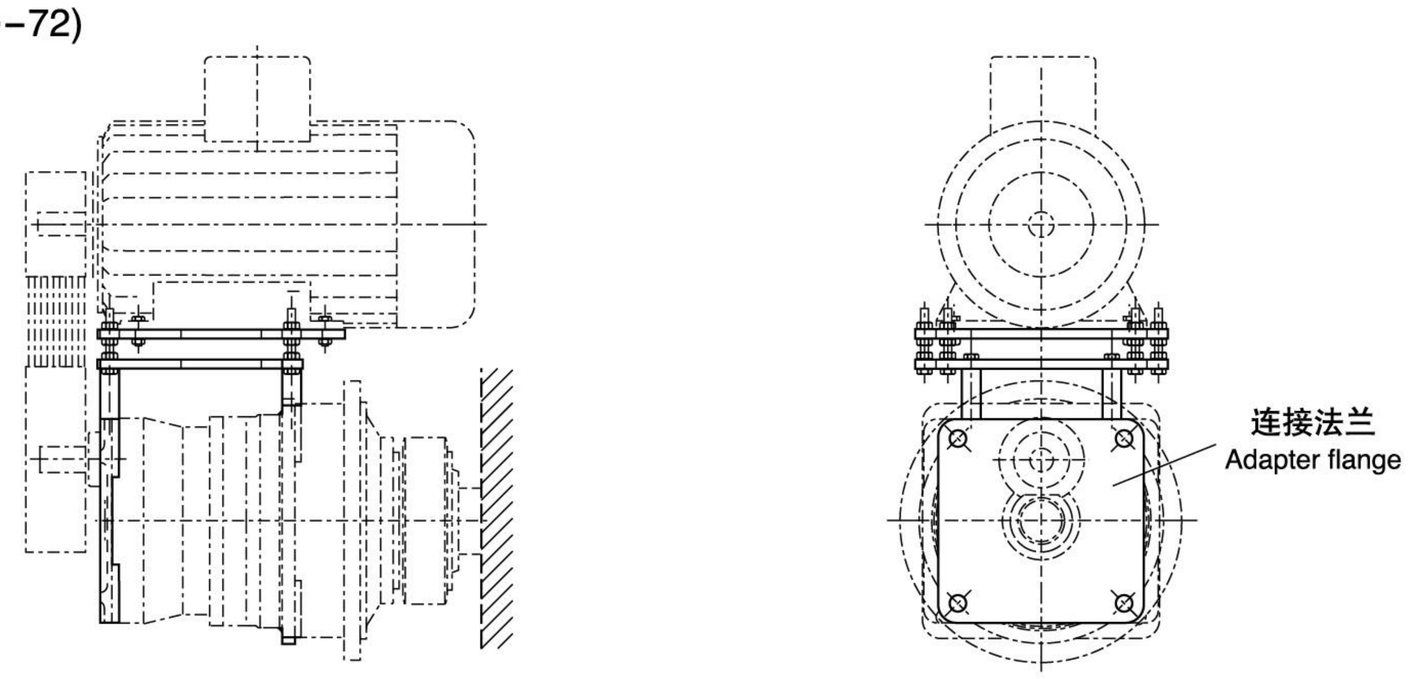

法兰联接及底座安装时螺母的预紧扭矩: Tightening Torques for Flange Connections and Foot-mounted Design:

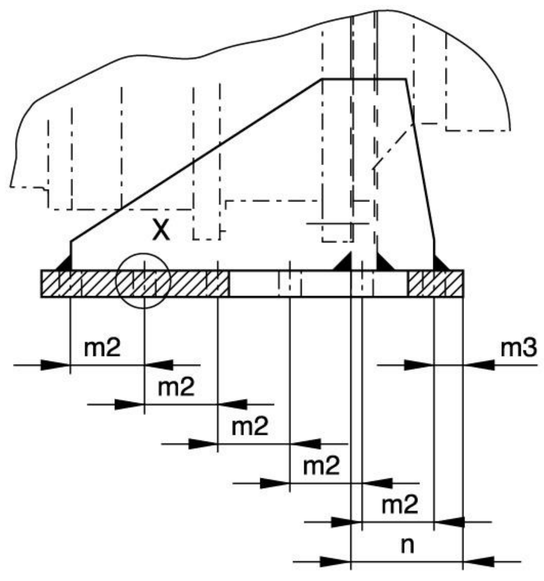

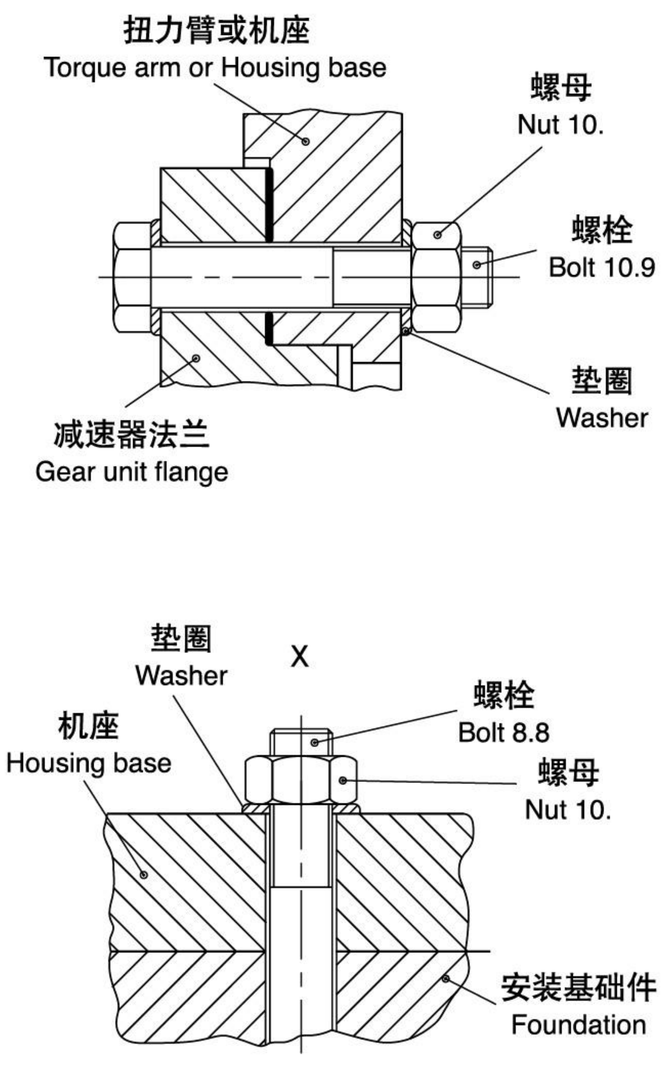

Size	Flange attachment		Base attachment	
	螺栓 Thread (10.9)	预紧扭矩 Tightening torque (N · m)	螺栓 Thread (8.5)	预紧扭矩 Tightening torque (N · m)
9	M16	295	M24	710
10	M16	295	M24	710
11	M20	580	M24	710
12	M24	1000	M24	710
13	M24	1000	M24	710
14	M24	1000	M30	1450
16	M24	1000	M30	1450
17	M30	2000	M36	2530
18	M30	2000	M36	2530
19/20	M30	2000	M42	4070
21/22	M36	3560	M48	6140
23/24	M36	3560	M48	6140
25/26	M42	5720	M56	9840
27/28	M48	8640	M56	9840
29/30	M48	8640	M64	14300
31/32	M56	13850	M64	14300
33/34	M56	13850	M64	14300

P系列减速机带电机法兰输入：

Planetary gear units with motor flange and coupling:

P2S. 带电机、输入法兰及联轴器尺寸:

Type P2S. With Motor Bell Housing and Coupling:

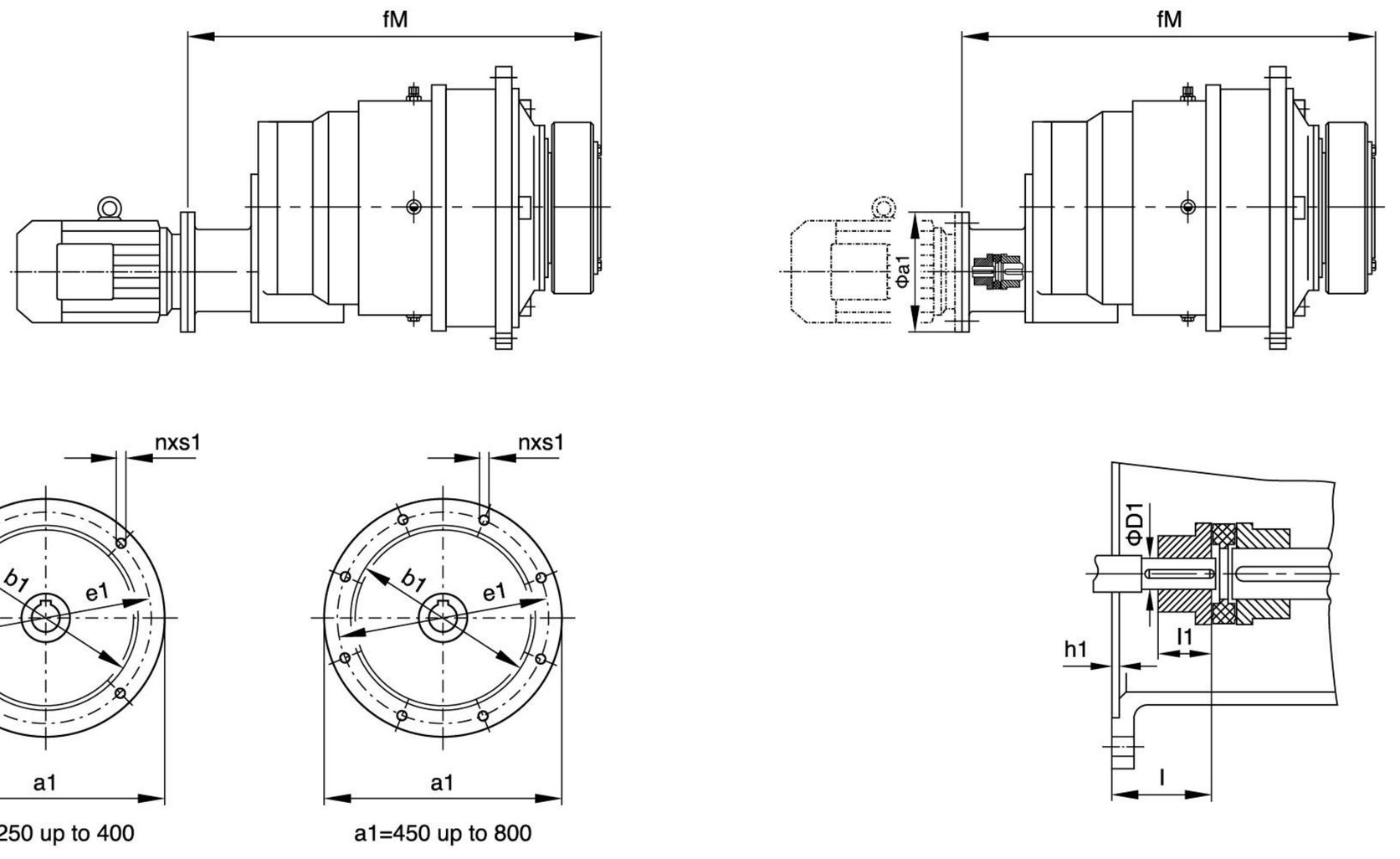

P2S.	电机 Motor (Y)*	法兰 Flange (F)**	a1	b1(h7)	D1	e1	fM	h1	l1	l	n	s1
9	160		350	250	42	300	832	6	75	110	4	M16
	180		350	250	48	300	832	6	75	110	4	M16
10	160		350	250	42	300	861	6	75	110	4	M16
	180		350	250	48	300	861	6	75	110	4	M16
11	160		350	250	42	300	1010	6	75	110	4	M16
	180		350	250	48	300	1010	6	75	110	4	M16
	200		400	300	55	350	1010	7	75	110	4	M16
12	160		350	250	42	300	1044	6	75	110	4	M16
	180		350	250	48	300	1044	6	75	110	4	M16
	200		400	300	55	350	1044	7	75	110	4	M16
13	225		450	350	60	400	1247	7	90	140	8	M16
	250		550	450	65	500	1247	8	90	140	8	M16
14	225		450	350	60	400	1307	7	90	140	8	M16
	250		550	450	65	500	1307	8	90	140	8	M16
16	250		550	450	65	500	1452	7	100	140	8	M16
	280		550	450	75	500	1452	8	100	140	8	M16
17	250		550	450	65	500	1487	7	100	140	8	M16
	280		550	450	75	500	1487	8	100	140	8	M16
18	315		660	550	80	600	1680	11	110	140	8	M20
19,20	315		660	550	80	600	1728	11	110	140	8	M20

注：(1)“*”所选直联电机机座号所对应的功率应满足传动能力表；
“**”表格中所示的法兰为标准型号的法兰，如有异同请另咨询。
(2)侧面扭力臂组合，请咨询。

Note: (1)“*”Power of selected motor must meet transmission table.
“**”Indicate standard flange, if special dimension is needed, please consult us.
(2) For combinations with torque arm on one side, please refer to us.

P3N. 带电机法兰及联轴器尺寸:

Type P3N. With Motor Bell Housing and Coupling:

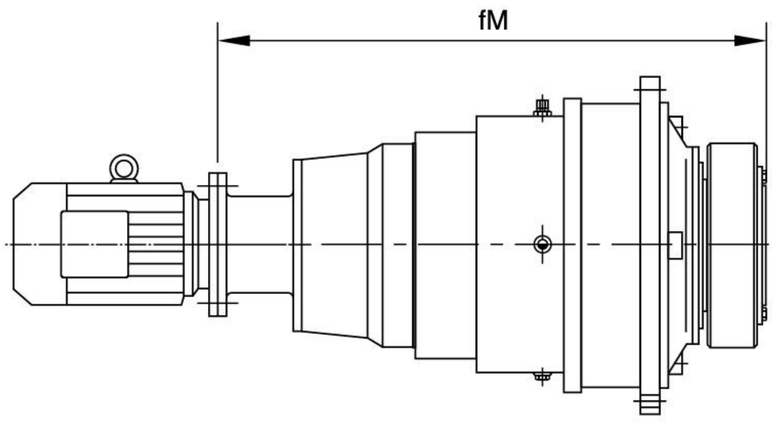

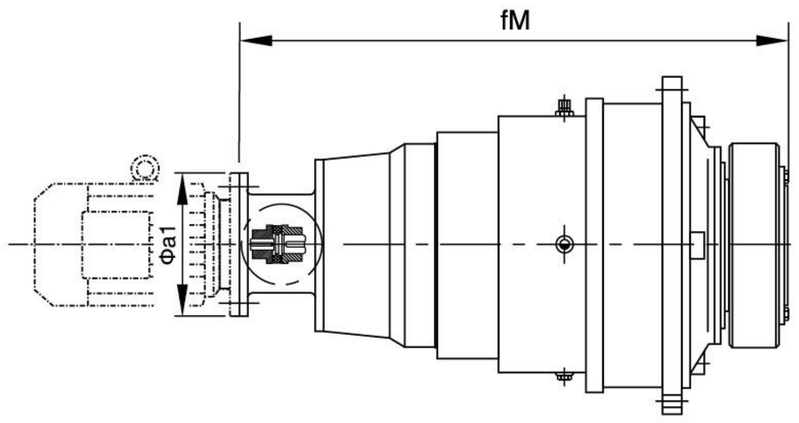

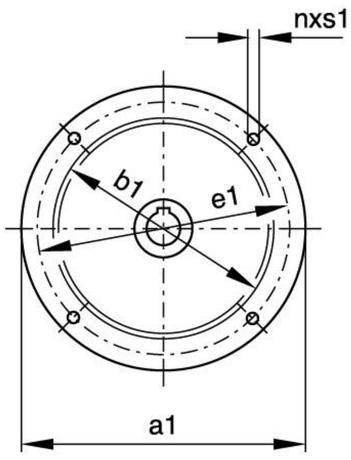

a1=250 up to 400

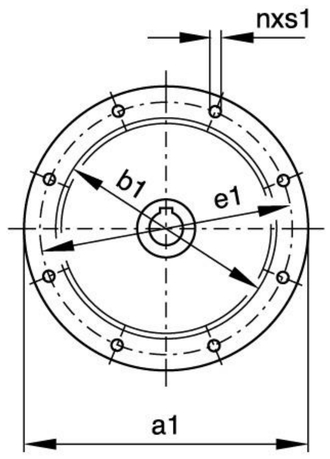

a1=450 up to 800

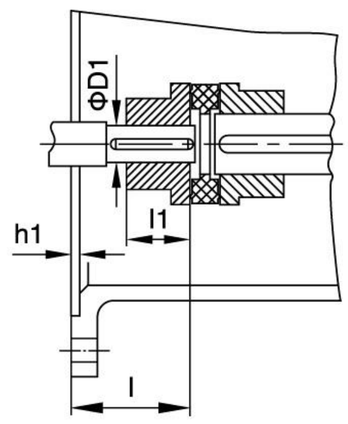

P3N.	电机 Motor (Y)*	法兰 Flange (F)**	a1	b1(h7)	D1	e1	fM	h1	l1	l	n	s1
9	132		300	230	38	265	912	5	56	80	4	M12
	160		350	250	42	300	960	6	80	110	4	M16
	180		350	250	48	300	960	6	80	110	4	M16
10	132		300	230	38	265	941	5	56	80	4	M12
	160		350	250	42	300	989	6	80	110	4	M16
	180		350	250	48	300	989	6	80	110	4	M16
11	132		300	230	38	265	1002	5	56	80	4	M12
	160		350	250	42	300	1050	6	80	110	4	M16
	180		350	250	48	300	1050	6	80	110	4	M16
12	132		300	230	38	265	1036	5	56	80	4	M12
	160		350	250	42	300	1084	6	80	110	4	M16
	180		350	250	48	300	1084	6	80	110	4	M16
13	160		350	250	42	300	1159	6	80	110	4	M16
	180		350	250	48	300	1159	6	80	110	4	M16
	200		400	300	55	350	1159	7	80	110	4	M16
14	160		350	250	42	300	1219	6	80	110	4	M16
	180		350	250	48	300	1219	6	80	110	4	M16
	200		400	300	55	350	1219	7	80	110	4	M16
16	200		400	300	55	350	1400	7	90	110	4	M16
	225		450	350	60	400	1430	7	90	140	8	M16
17	200		400	300	55	350	1435	7	90	110	4	M16
	225		450	350	60	400	1465	7	90	140	8	M16
18	250		550	450	65	500	1636.5	7	100	140	8	M16
	280		550	450	75	500	1636.5	8	100	140	8	M16
19,20	250		550	450	65	500	1685	7	100	140	8	M16
	280		550	450	75	500	1685	8	100	140	8	M16

注：(1)“*”所选直联电机机座号所对应的功率应满足传动能力表；
“**”表格中所示的法兰为标准型号的法兰，如有异同请另咨询。
(2)侧面扭力臂组合，请咨询。

Note: (1)“*”Power of selected motor must meet transmission table.
“**”Indicate standard flange, if special dimension is needed, please consult us.
(2) For combinations with torque arm on one side, please refer to us.

P3S. 带电机法兰及联轴器尺寸:

Type P3S. With Motor Bell Housing and Coupling:

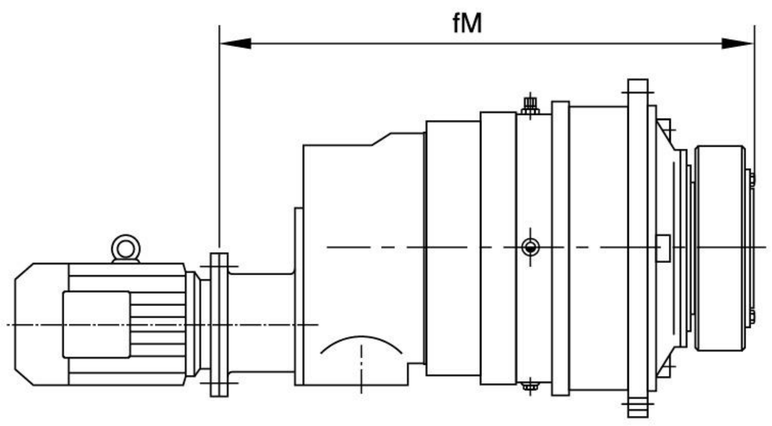

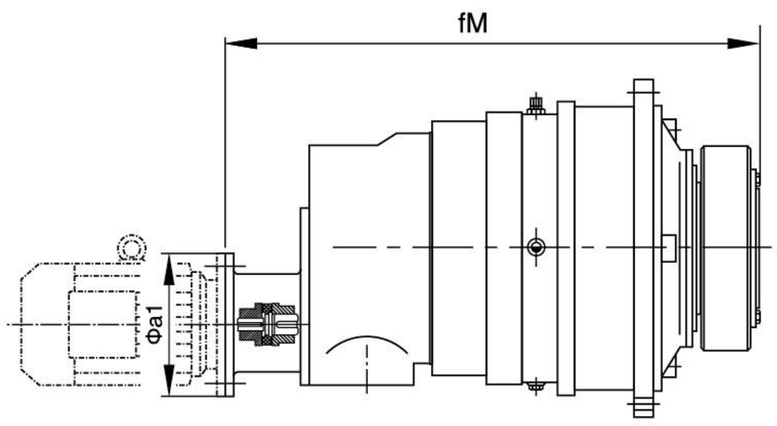

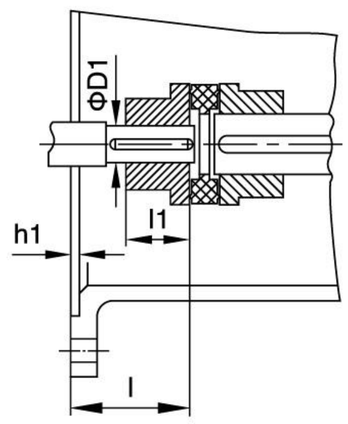

P

P3S.	电机 Motor (Y)*	法兰 Flange (F)**	a1	b1	D1	e1	fM	h1	l1	l	n	s1
9	100		250	180	28	215	865	5	45	60	4	M12
	112		250	180	28	215	865	5	45	60	4	M12
	132		300	230	38	265	896	5	70	80	4	M12
	160		350	250	42	300	931	6	75	110	4	M16
10	100		250	180	28	215	894	5	45	60	4	M12
	112		250	180	28	215	894	5	45	60	4	M12
	132		300	230	38	265	925	5	70	80	4	M12
	160		350	250	42	300	957	6	75	110	4	M16
11	112		250	180	28	215	955	5	45	60	4	M12
	132		300	230	38	265	986	5	70	80	4	M12
	160		350	250	42	300	1018	6	75	110	4	M16
	180		350	250	48	300	1018	6	75	110	4	M16
12	112		250	180	28	215	989	5	45	60	4	M12
	132		300	230	38	265	1020	5	70	80	4	M12
	160		350	250	42	300	1052	6	75	110	4	M16
	180		350	250	48	300	1052	6	75	110	4	M16
13	132		300	230	38	265	1095	5	70	80	4	M12
	160		350	250	42	300	1127	6	75	110	4	M16
	180		350	250	48	300	1127	6	75	110	4	M16
14	132		300	230	38	265	1155	5	70	80	4	M12
	160		350	250	42	300	1187	6	75	110	4	M16
	180		350	250	48	300	1187	6	75	110	4	M16
16	160		350	250	42	300	1365	6	75	110	4	M16
	180		350	250	48	300	1365	6	75	110	4	M16
	200		400	300	55	350	1365	7	75	110	4	M16
17	160		350	250	42	300	1390	6	75	110	4	M16
	180		350	250	48	300	1390	6	75	110	4	M16
	200		400	300	55	350	1400	7	75	110	4	M16
18	180		350	250	48	300	1558.5	6	90	110	4	M16
	200		400	300	55	350	1570.5	6	90	110	4	M16
	225		450	350	60	400	1608.5	7	90	110	8	M16
	250		550	450	65	500	1608.5	7	90	110	8	M16
19,20	180		350	250	48	300	1606	6	90	110	4	M16
	200		400	300	55	350	1618	6	90	110	4	M16
	225		450	350	60	400	1656	7	90	110	8	M16
	250		550	450	65	500	1656	7	90	110	8	M16

注：(1)“*”所选直联电机机座号所对应的功率应满足传动能力表；
“**”表格中所示的法兰为标准型号的法兰，如有异同请另咨询。
(2)侧面扭力臂组合，请咨询。

Note: (1)“*”Power of selected motor must meet transmission table.
“**”Indicate standard flange, if special dimension is needed, please consult us.
(2) For combinations with torque arm on one side, please refer to us.

P2K. 带电机法兰及联轴器尺寸:

Type P2K. With Motor Bell Housing and Coupling:

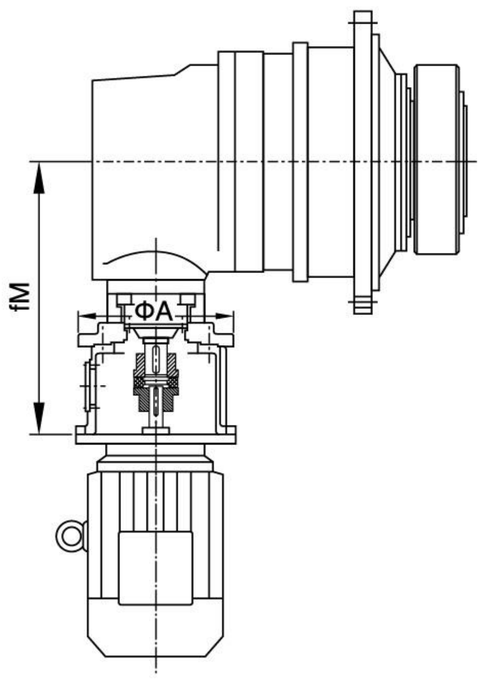

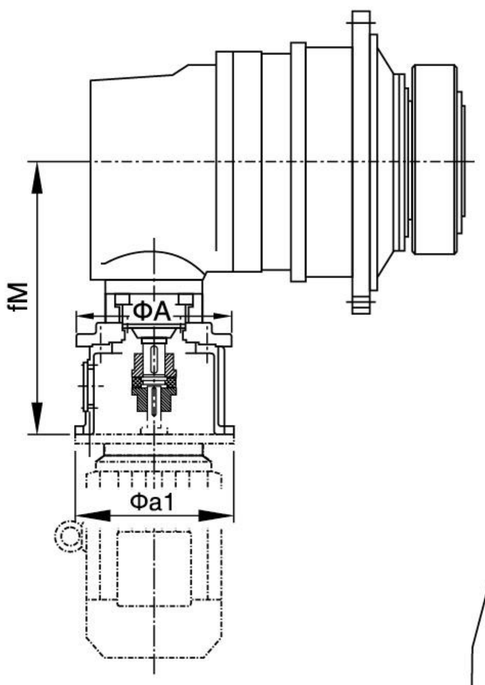

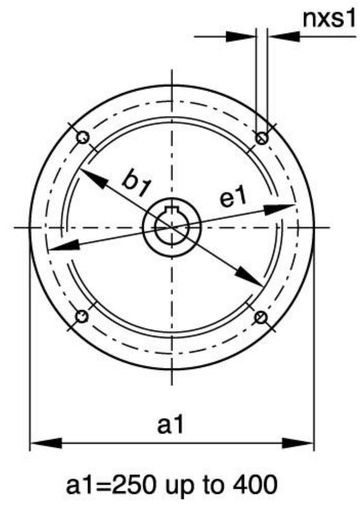

a1=250 up to 400

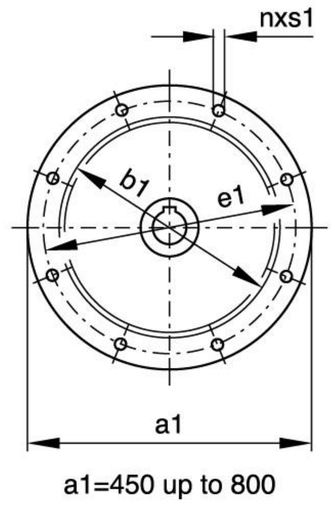

a1=450 up to 800

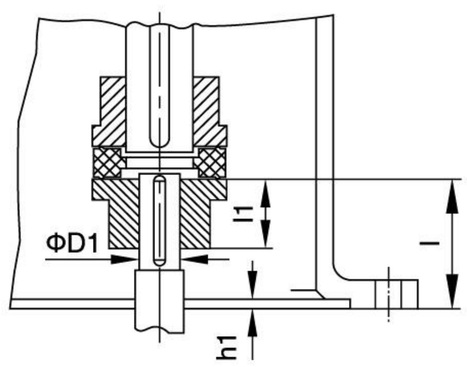

P2K.	电机 Motor (Y)*	法兰 Flange (F)**	a1	A	b1	D1	e1	fM	h1	l	l1	n	s1
9,10	132		300	250	230	38	265	486	5	80	70	4	M12
	160		350	250	250	42	300	528	6	110	75	4	M16
11,12	160		350	300	250	42	300	593	6	110	75	4	M16
	180		350	350	250	48	300	593	6	110	75	4	M16
	200		400	350	300	55	350	593	7	110	75	4	M16
13,14	160		350	440	250	42	300	663	6	110	75	4	M16
	180		350	440	250	48	300	663	6	110	75	4	M16
	200		400	440	300	55	350	663	7	110	75	4	M16
	225		450	440	350	60	400	695	7	140	80	8	M16
	250		550	440	450	65	500	707	8	140	85	8	M16
16,17	200		400	440	300	55	350	770	7	110	80	4	M16
	225		425	440	350	60	400	800	7	140	80	8	M16
	250		550	440	450	65	500	812	8	140	85	8	M16
	280		550	440	450	75	500	812	8	140	85	8	M16
18,19,20	225		450	440	350	60	400	932	7	140	80	8	M16
	250		550	440	450	65	500	932	8	140	85	8	M16
	280		550	440	450	75	500	932	8	140	85	8	M16
	315*		660	440	550	80	600	967	11	170	100	8	M20

注：(1)“*”所选直联电机机座号所对应的功率应满足传动能力表；
“**”表格中所示的法兰为标准型号的法兰，如有异同请另咨询。
(2)侧面扭力臂组合，请咨询。

Note: (1)“*”Power of selected motor must meet transmission table.
“**”Indicate standard flange, if special dimension is needed, please consult us.
(2) For combinations with torque arm on one side, please refer to us.

P2L. 带电机法兰及联轴器尺寸:

Type P2L. With Motor Bell Housing and Coupling:

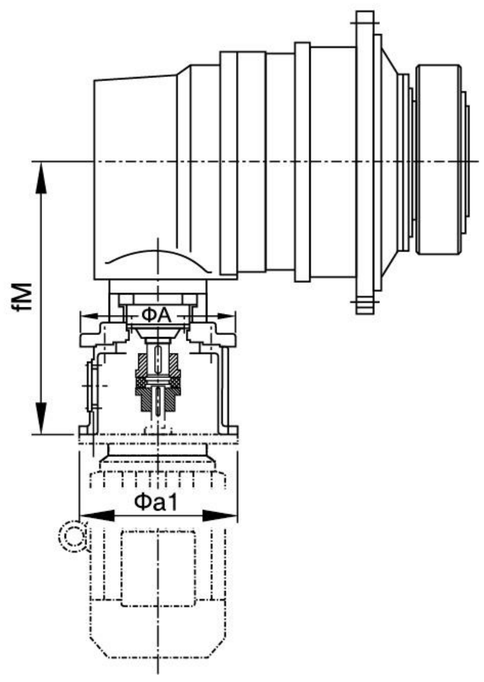

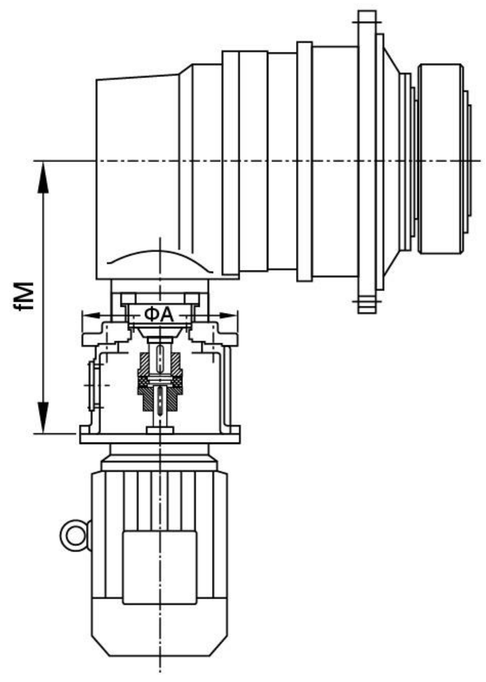

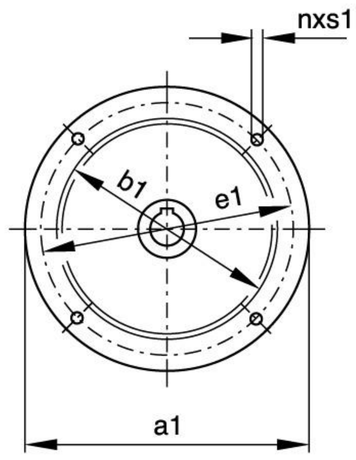

a1=250 up to 400

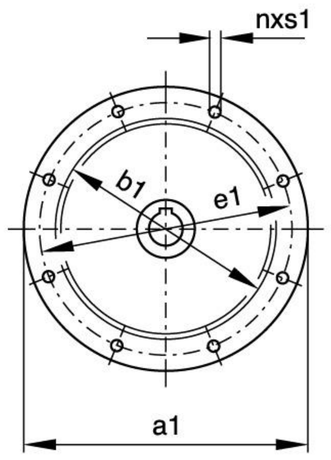

a1=450 up to 800

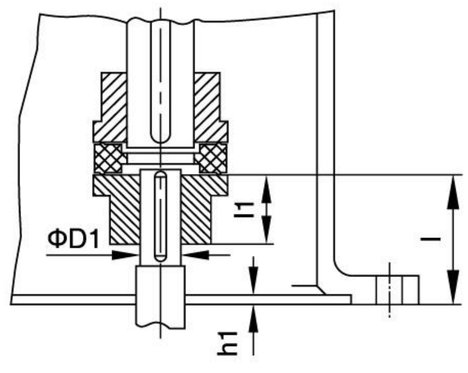

P2L.	电机 Motor (Y)*	法兰 Flange (F)**	a1	A	b1	D1	e1	fM	h1	l	l1	n	s1
9,10	160		350	440	250	42	300	543	6	110	75	4	M16
	180		350	440	250	48	300	543	6	110	75	4	M16
	200		400	440	300	55	350	543	7	110	75	4	M16
	225		450	440	350	60	400	575	7	140	80	8	M16
11,12	200		400	440	300	55	350	600	7	110	75	4	M16
	225		450	440	350	60	400	630	7	140	80	8	M16
	250		550	440	450	65	500	642	8	140	85	8	M16
13,14	225		450	440	350	60	400	732	7	140	85	8	M16
	250		550	440	450	65	500	732	8	140	85	8	M16
	280		550	440	450	75	500	732	8	140	85	8	M16
16,17	280		550	600	450	75	500	842	8	140	100	8	M16
	315*		660	650	550	80	600	872	11	170	100	8	M20
	315MC		660	650	550	80	600	872	11	170	100	8	M20
	315MD		660	650	550	80	600	872	11	170	100	8	M20
	315LB		660	650	550	80	600	987	11	170	100	8	M20
18,19,20	315*		660	650	550	80	600	987	11	170	100	8	M20
	315MC		660	650	550	80	600	987	11	170	100	8	M20
	315MD		660	650	550	80	600	987	11	170	100	8	M20
	315LB		660	650	550	80	600	1122	11	170	100	8	M20
21,22,23,24	315MC		660	650	550	80	600	1122	11	170	125	8	M20
	315MD		660	650	550	80	600	1122	11	170	125	8	M20
	315LB		660	650	550	80	600	1122	11	170	125	8	M20
	355MB		800	650	680	95	740	1122	11	170	125	8	M20
	355LB		800	650	680	95	740	1122	11	170	125	8	M20

注：(1)“*”所选直联电机机座号所对应的功率应满足传动能力表；
“**”表格中所示的法兰为标准型号的法兰，如有异同请另咨询。
(2)侧面扭力臂组合，请咨询。

Note: (1)“*”Power of selected motor must meet transmission table.
“**”Indicate standard flange, if special dimension is needed, please consult us.
(2) For combinations with torque arm on one side, please refer to us.

P3K. 带电机法兰及联轴器尺寸:

Type P3K. With Motor Bell Housing and Coupling:

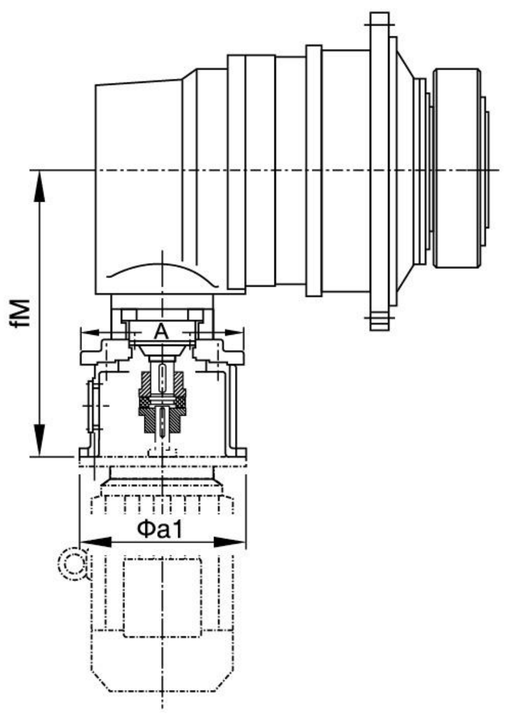

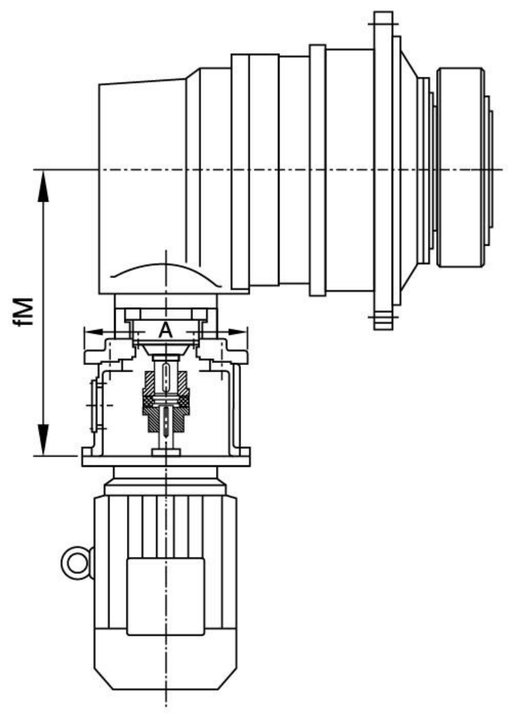

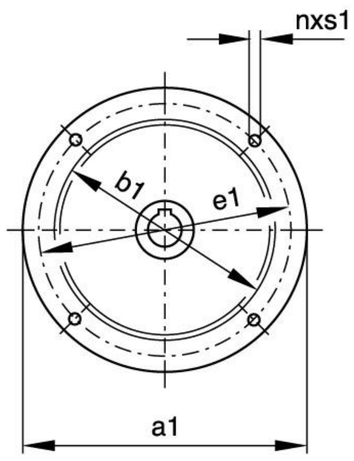

a1=250 up to 400

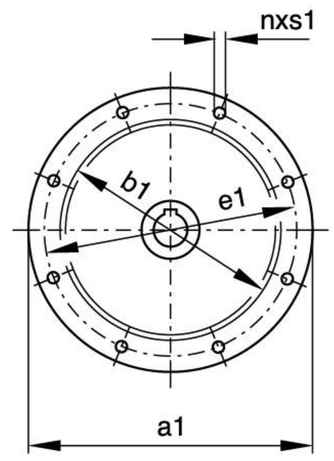

a1=450 up to 800

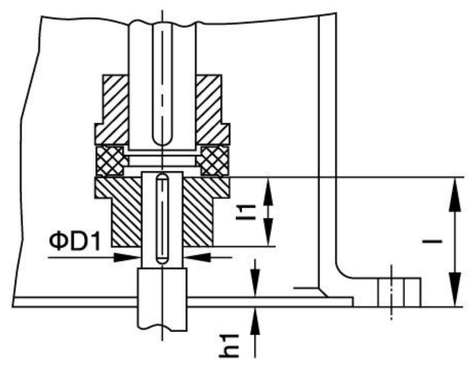

P3K.	电机 Motor (Y)*	法兰 Flange (F)**	a1	A	b1	D1	e1	fM	h1	l	l1	n	s1
9,10,11 12,13,14	132		300	250	230	38	265	486	5	80	70	4	M12
	160		350	250	250	42	300	528	6	110	75	4	M16
	180		350	250	250	48	300	528	6	110	75	4	M16
16,17	160		350	350	250	42	300	593	6	110	75	4	M16
	180		350	350	250	40	300	593	6	110	75	4	M16
	200		400	350	300	55	350	593	7	110	75	4	M16
18,19,20 21,22	160		350	440	250	42	300	663	6	110	75	4	M16
	180		350	440	250	48	300	663	6	110	75	4	M16
	200		400	440	300	35	350	663	7	110	75	4	M16
	225		450	440	350	60	400	695	7	140	80	8	M16
	250		550	440	450	65	500	707	8	140	85	8	M16
23,24 25,26	200		400	440	300	55	350	770	6	110	80	4	M16
	225		450	440	350	60	400	800	7	140	80	8	M16
	250		550	440	450	62	500	812	7	140	85	8	M16
	280		550	440	450	75	500	812	8	140	85	8	M16
27,28 29,30	225		450	440	350	60	400	932	7	140	85	8	M16
	250		550	440	450	65	500	932	7	140	85	8	M16
	280		550	440	450	75	500	932	8	140	85	8	M16
	315*		660	440	550	80	600	967	11	170	100	8	M20

注：(1)“*”所选直联电机机座号所对应的功率应满足传动能力表；
“**”表格中所示的法兰为标准型号的法兰，如有异同请另咨询。
(2)侧面扭力臂组合，请咨询。

Note: (1)“*”Power of selected motor must meet transmission table.
“**”Indicate standard flange, if special dimension is needed, please consult us.
(2) For combinations with torque arm on one side, please refer to us.

P

附件代号：　　Symbol of Add-on Pieces:

代　号 Symbol	附　件 Add-on piece	示　例 Representation
99	不带附件 Without add-on piece	
96	带机座 Gear housing base	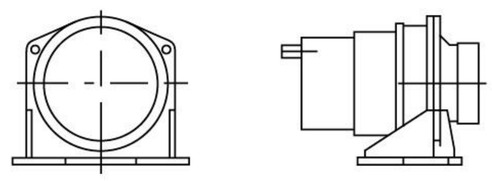
71	电机机架 (电机、联轴器) Motor bracket (motor,coupling)	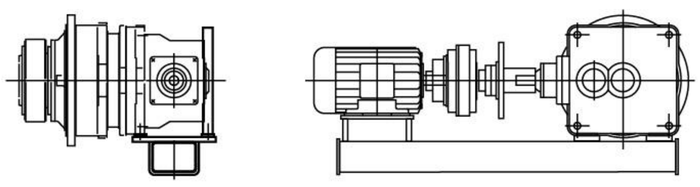
72	电机机架 Motor bracket	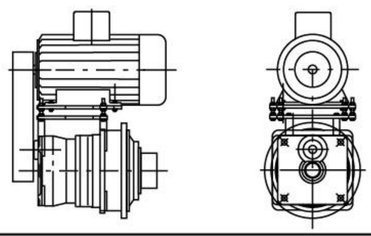
73	电机移动机座 (电机、联轴器、齿轮箱) Motor swing-base (motor,coupling,gear unit)	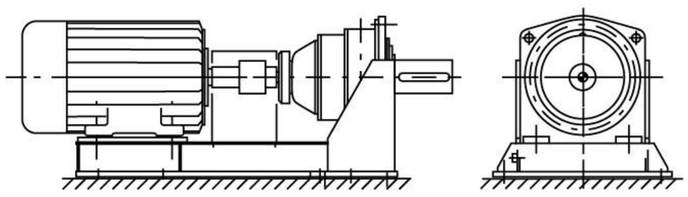
74*	钟型罩式法兰 (输出) Bell housing (output)	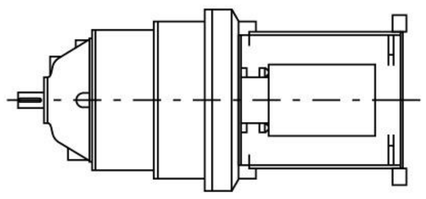
75	扭力臂 (单向) Torque reaction arm (on one side)	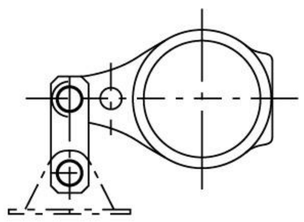
76	扭力臂 (双向) Torque reaction arm (on both sides)	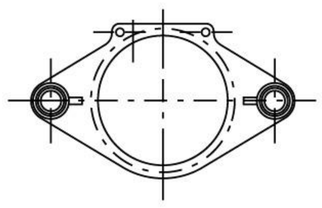
77	扭转轴支架 Torsion shaft support	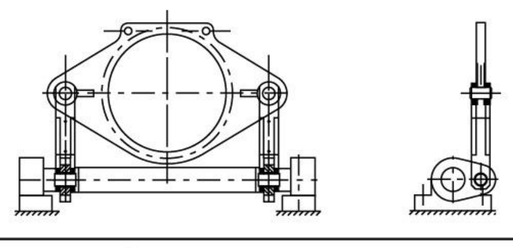
80	支架 I Support I	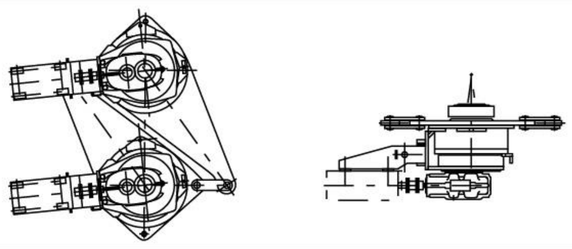
81	支架 II Support II	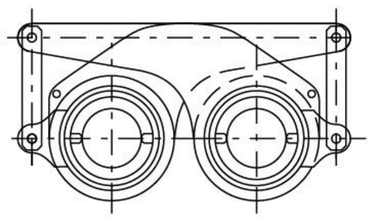
	特殊设计按客户要求供货。　　Special design on request	

* 非刚性联接　　* Not for rigid couplings

P系列行星齿轮箱垂直安装时润滑油补偿油箱

Planetary Gear Units Oil Compensating Tank for Vertical Mounting Position

安装方位为V1、V3、V11、V31时采用润滑油补偿油箱：

Oil supply by compensating tank for vertical mounting position V1,V3,V11and V31

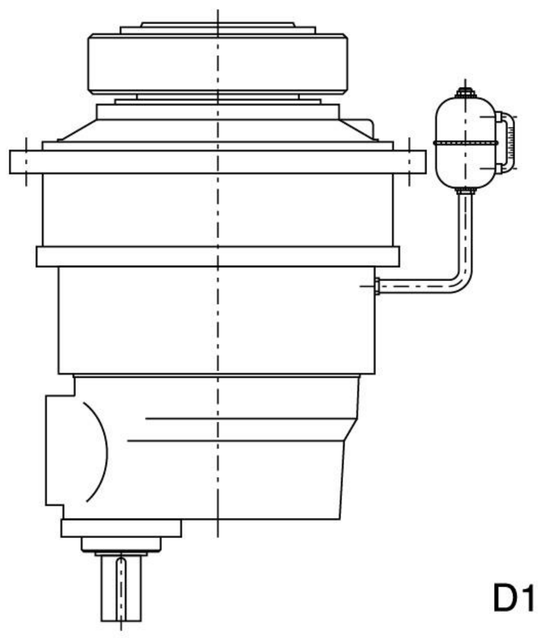

D1

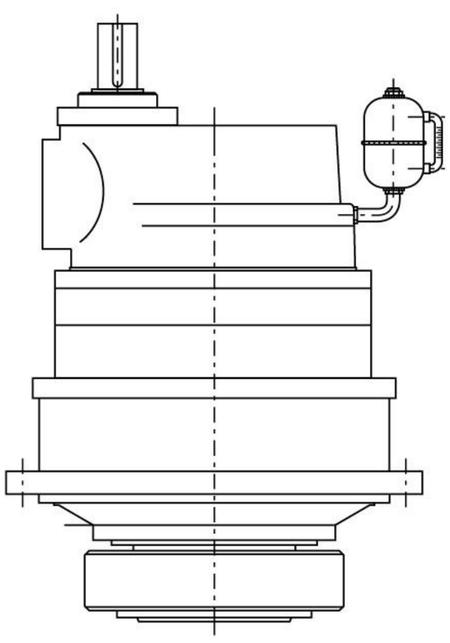

D2

在垂直安装条件下，正常的润滑方式很难给予顶端轴承提供润滑油，为了确保润滑油的供应，齿轮箱内的油量必须加高，如上图（D1、D2）所示，通过补偿油箱加高油位，补偿油箱上装有通气帽通气。油箱可被安装在齿轮箱上，也可以安装在客户的机架上，实际尺寸和最终位置在订货时商定。

In case of vertical mounting, in order to guarantee the oil supply to upper bearing, allxilliary oil tank (as D1, D2) should be installed to make oil level higher. It can installed on either gear units or brackets,it is exact dimension will be determined when placingan order.

水平安装时，油泵供油如下：

Oil supply by motor pumps for horizontal mounting position and drive from adove:

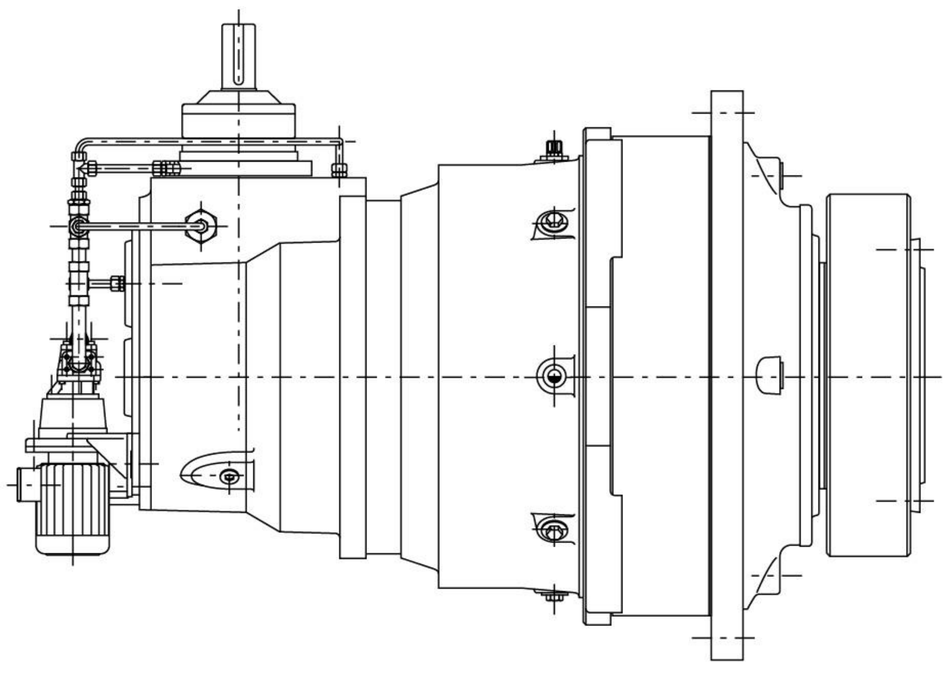

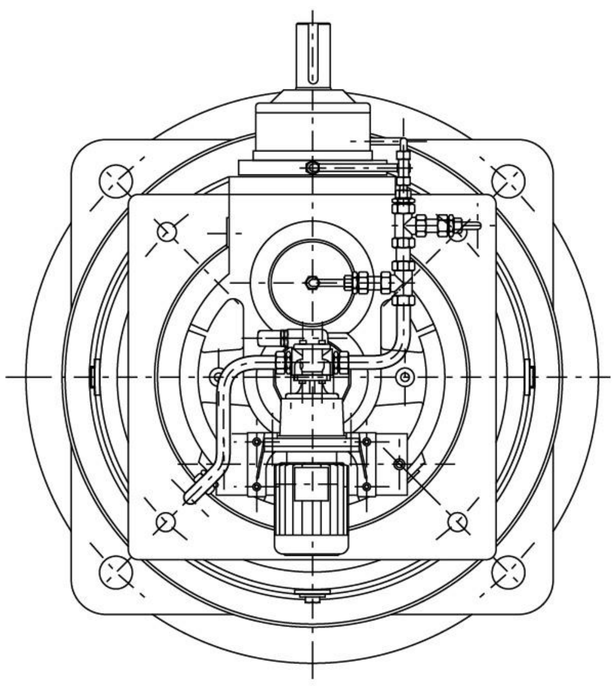

B51安装方位时，需配备电动泵强制循环润滑

[PK、PL为B51安装方位时所有规格(即9-34型)，PS的20型以上所有规格(即21-34型)]

Mounting position is B51, pump lubrication is necessary. (PK..,PL.. 9-34; PS21-34)

注：轴布置形式，请参阅P300。

Note: For shaft arrangement, see P300.

安装方位

Identifications of shaft arrangements:

水平安装 Horizontal gear unit position				垂直安装 Vertical geat nuit postition	
Coaxial planetary gear units 同轴式齿轮箱	0	P.N.	B5	V1	V3
Combined helical gear planetary gear units 斜齿–行星齿轮箱	1	P.S.	*) B51 B52 B53 B54	V11	V31
Combined bevel-helical gear planetary gear units 伞齿–斜齿–行星齿轮箱	2	P.K.	*) B51 B52 B53 B54	V11	V31
Combined bevel-gear planetary gear units 伞齿–行星齿轮箱	3	P.L.	*) B51 B52 B53 B54	V11	V31
Torque reaction arm 扭力臂安装	5		A51 A52 A53 A54 A55 A56		

*) 对于B51、V1、V3、V11、V31安装方位时，需考虑齿轮箱的润滑，请与我司联系。

*) Lubricant supply must be checked, please consult us.

因专注而专业 因专业而卓越

温州阿尔法机械制造有限公司

WENZHOU AERFA MACHINERY MANUFACTURING CO., LTD.

地　　址：浙江省平阳县鳌江大道390–394号

TEL/FAX：0577–63660251

客服热线：15958798933

http://aefjsj.com

E–mail: 15958798933@163.com